TESSERA 4x4 OFF ROAD ACCESSORIES

Think Quality!

Tessera Roll+

Basic Version + ⚙ S-KIT

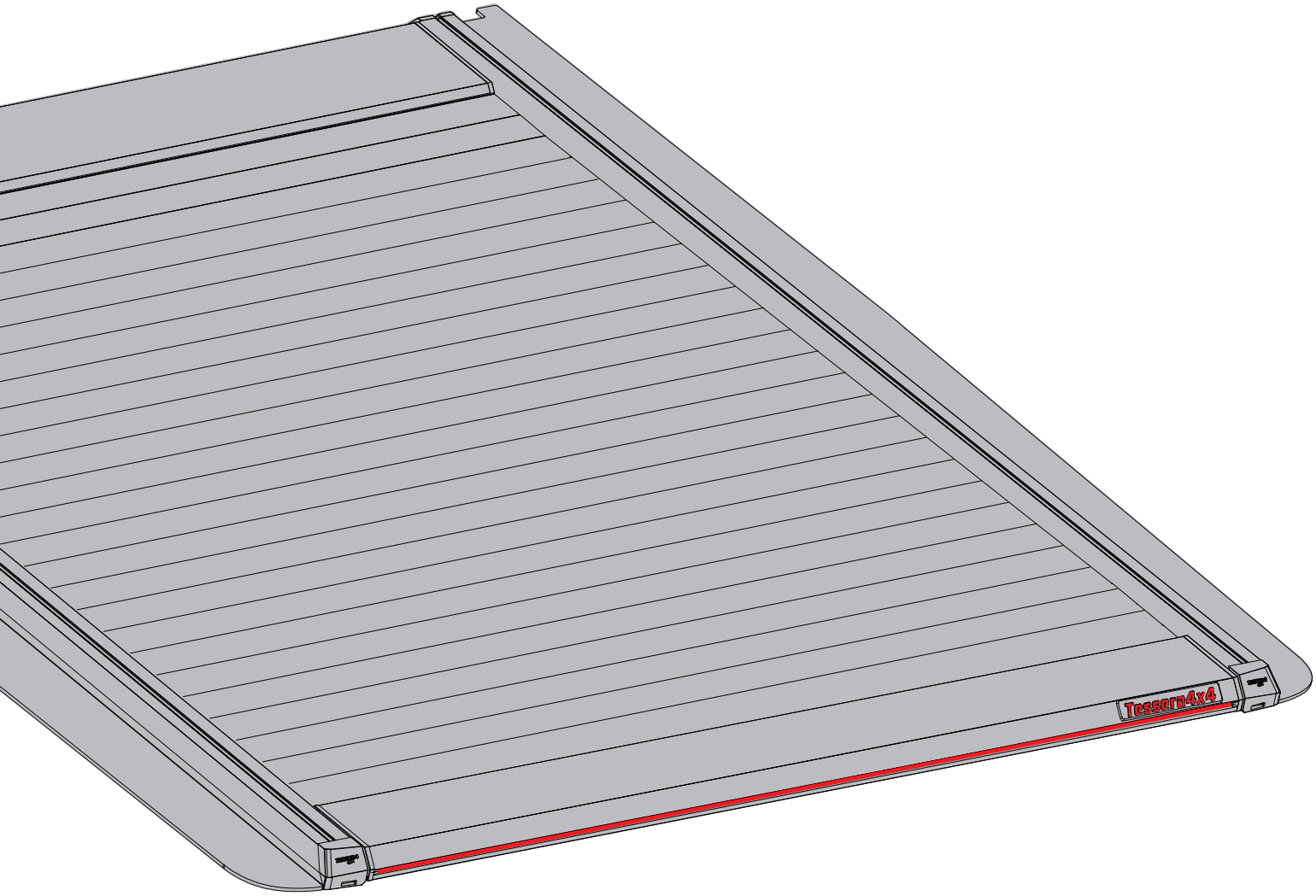

Installation Manual

PART NUMBER(S)	Model Year
TESS 14011 ROLL+S-KIT	VW AMAROK 2023+ WITH OR WITHOUT C-CHANNELS
Cab(s)	**Installation Time / Weight**
Double Cab	40-60 minutes / 53-57 kg

Ver.: 1.6

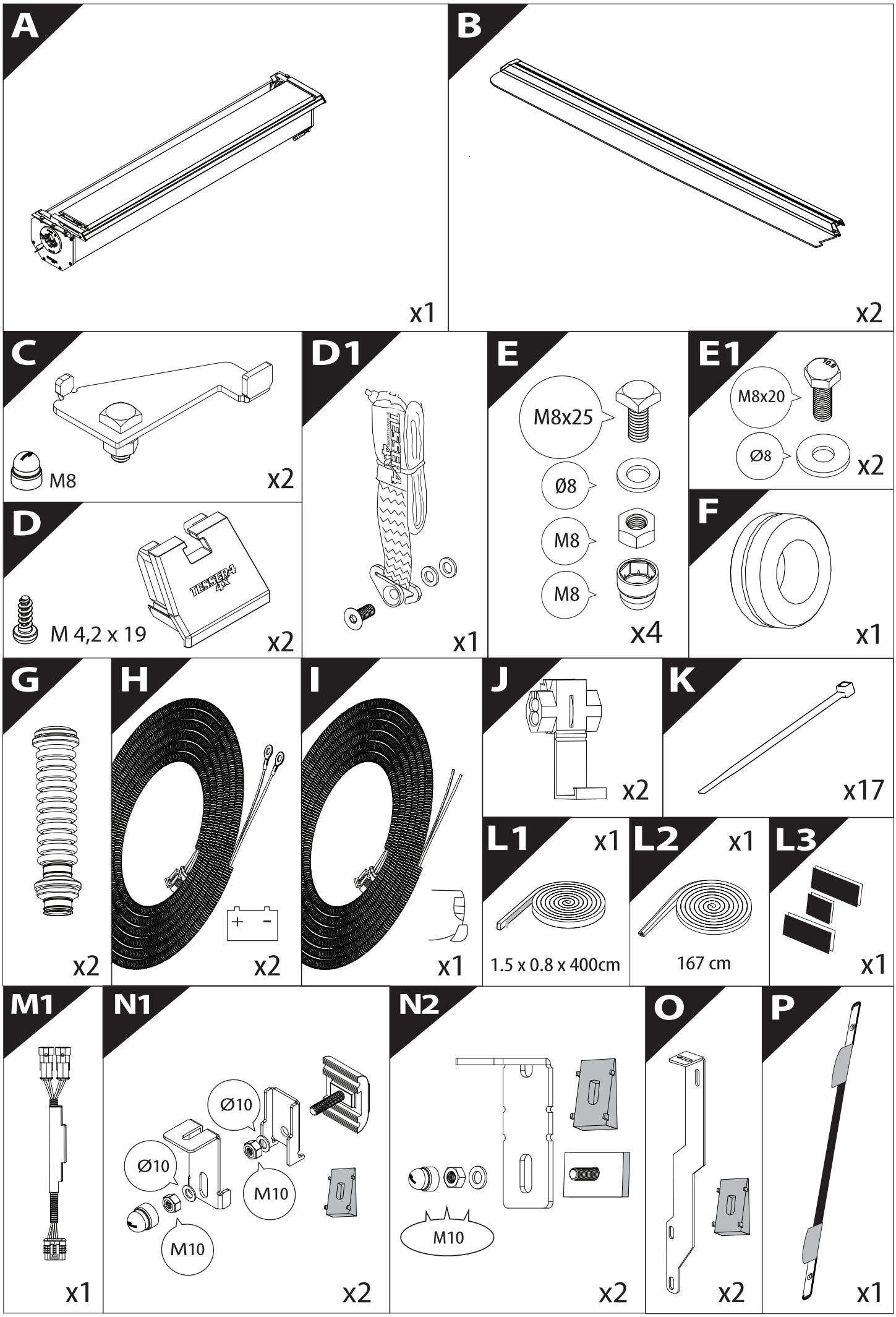
A
x1
B
x2
C
M8
x2
D1
x1
E
M8x25
Ø8
M8
M8
x4
E1
M8x20
Ø8
x2
D
M 4,2 x 19
x2
F
x1
G
x2
H
x2
I
x1
J
x2
K
x17
L1
x1
1.5 x 0.8 x 400cm
L2
x1
167 cm
L3
x1
M1
x1
N1
Ø10
Ø10
M10
M10
x2
N2
M10
x2
O
x2
P
x1

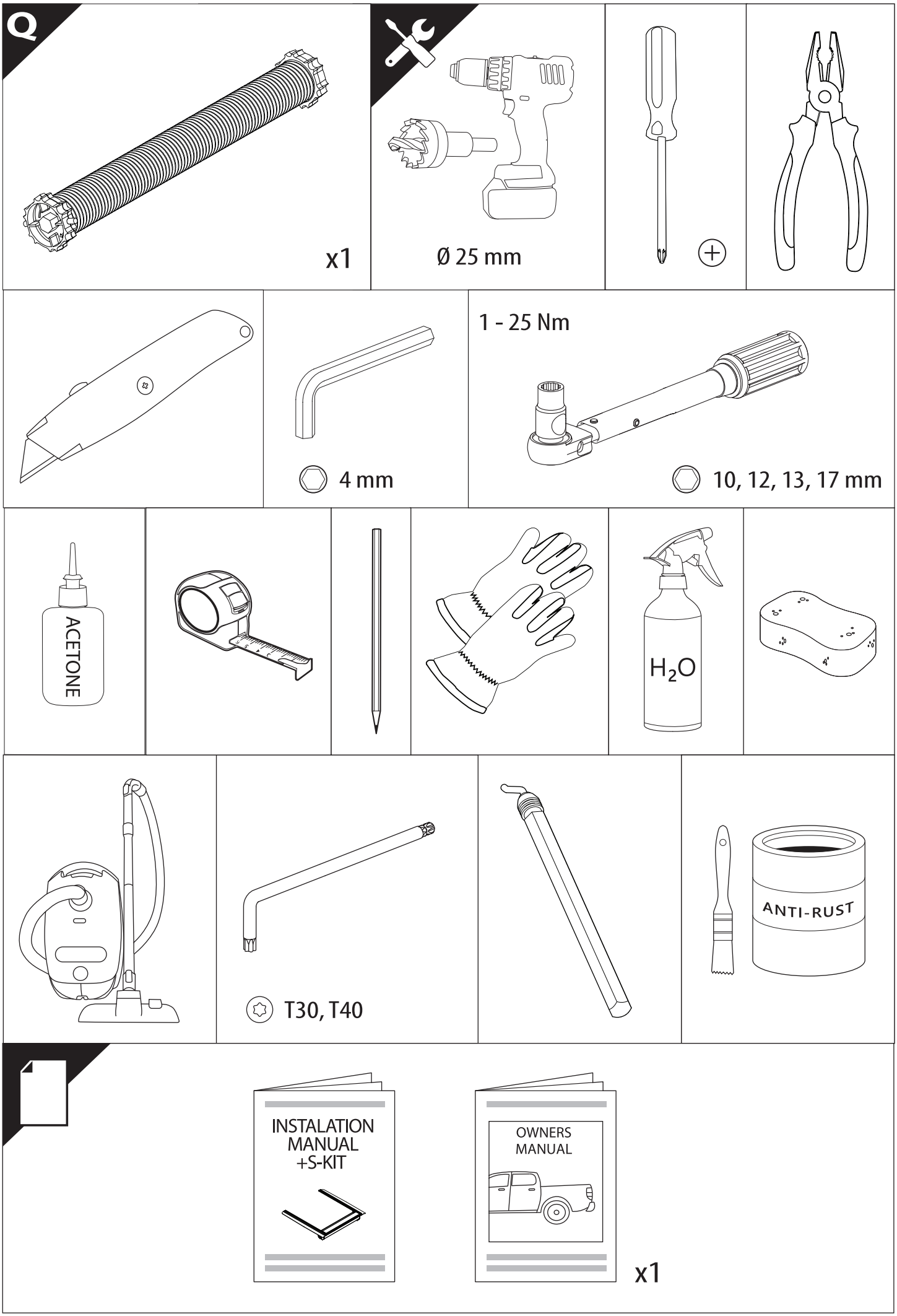
Q
x1
Ø 25 mm
1 - 25 Nm
4 mm
10, 12, 13, 17 mm
ACETONE
H_2O
T30, T40
ANTI-RUST
1
INSTALATION
MANUAL
+S-KIT
OWNERS
MANUAL
x1

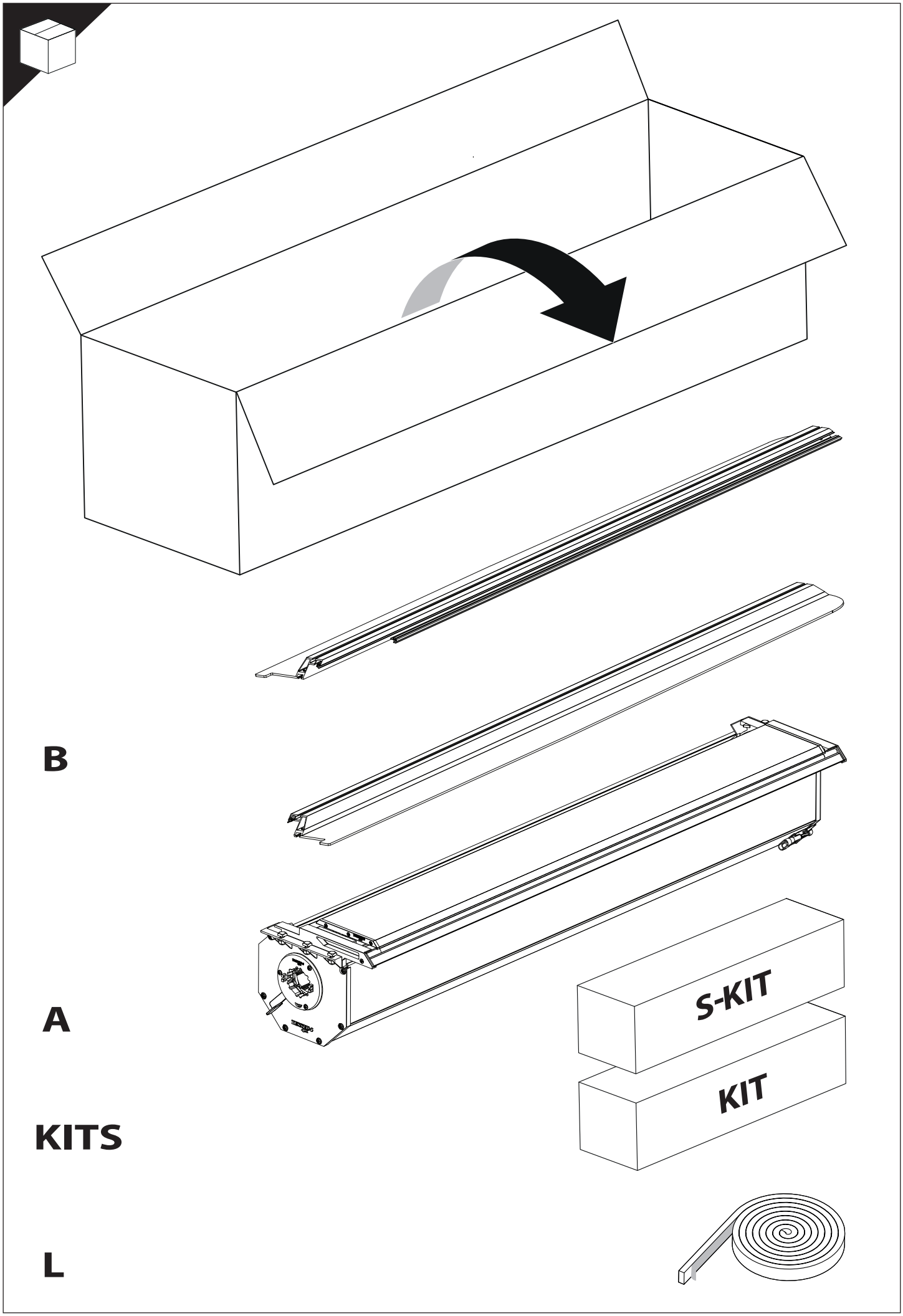
B
A
KITS
L
S-KIT
KIT

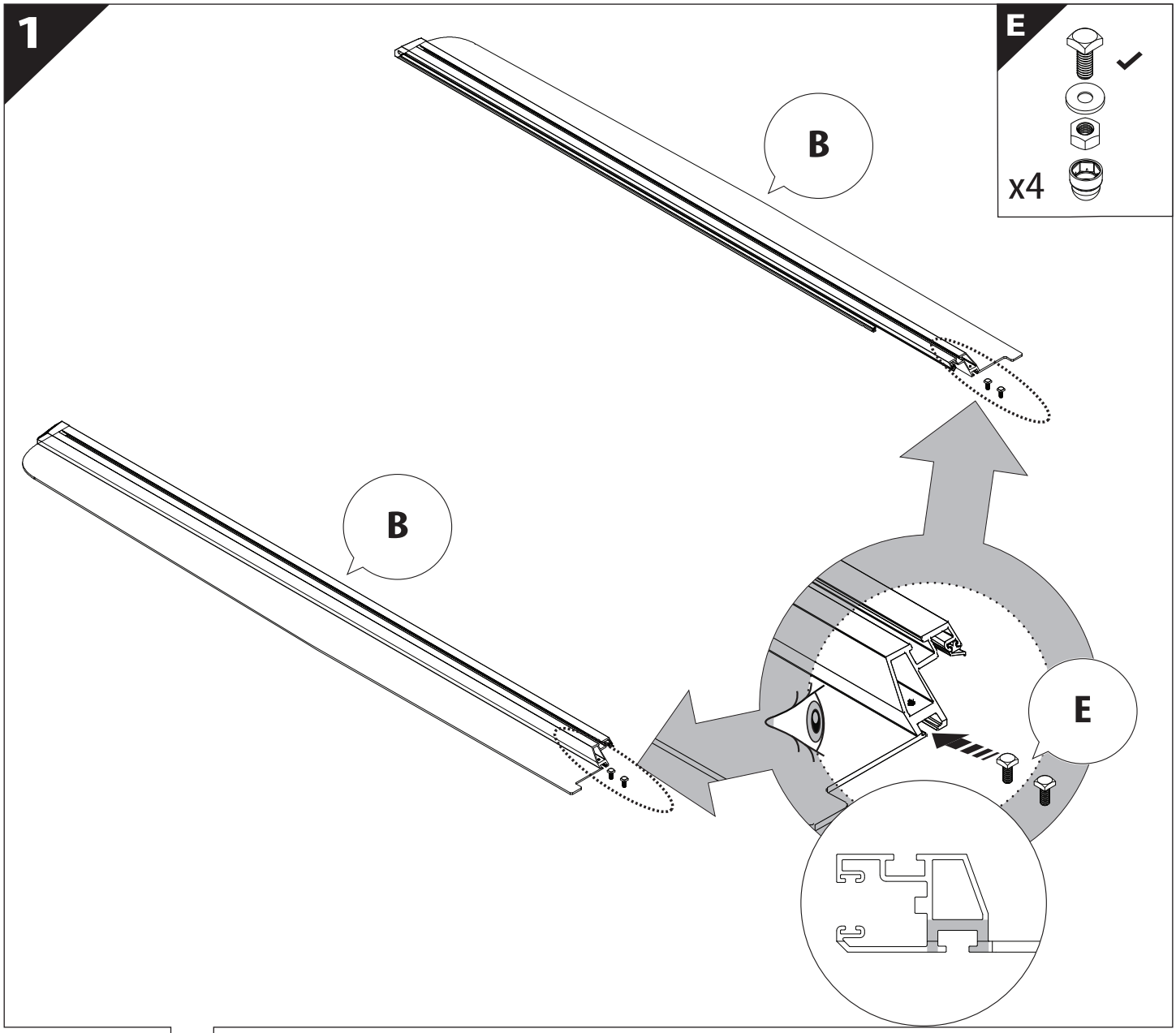
1
E
x4
B
B
E

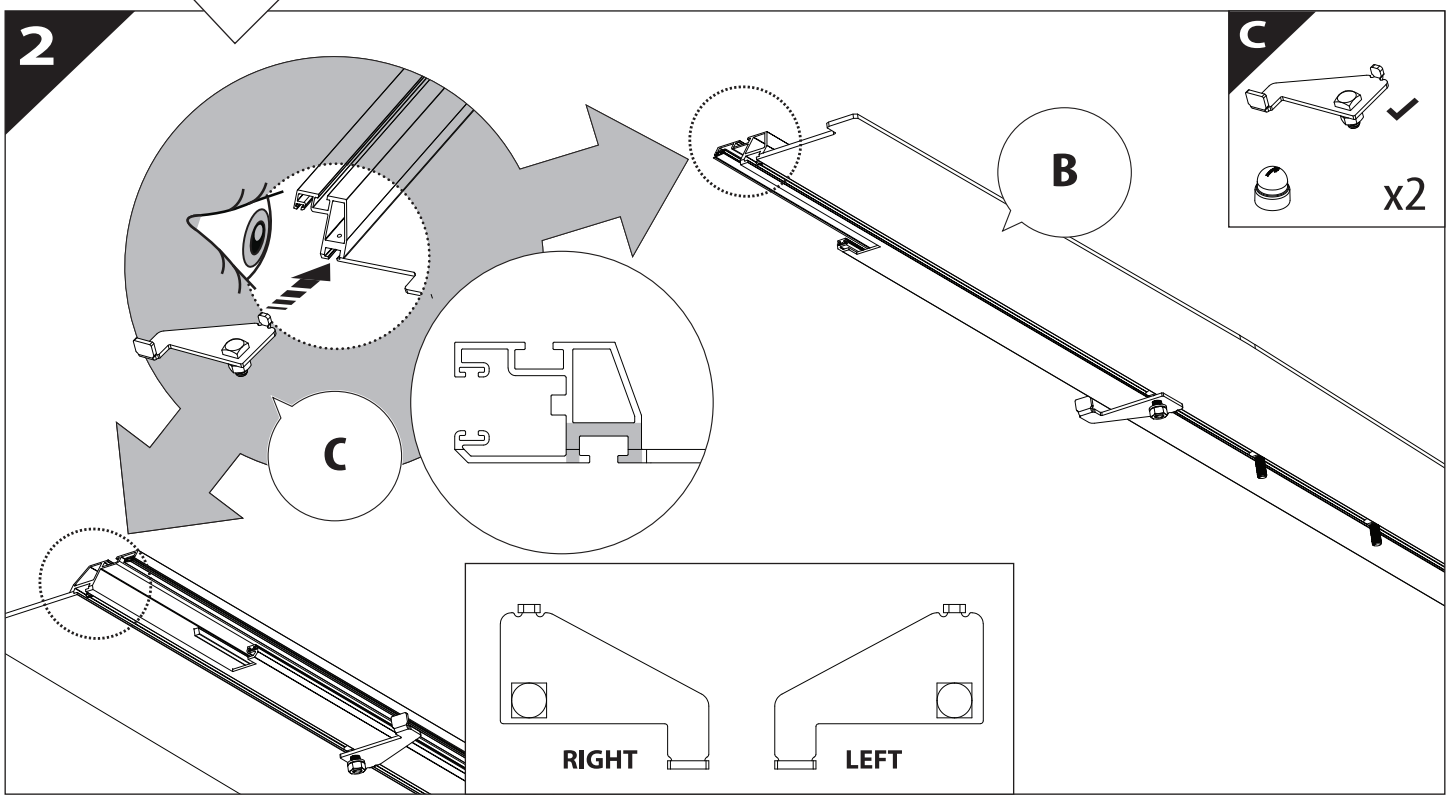
2
C
x2
B
C
RIGHT
LEFT

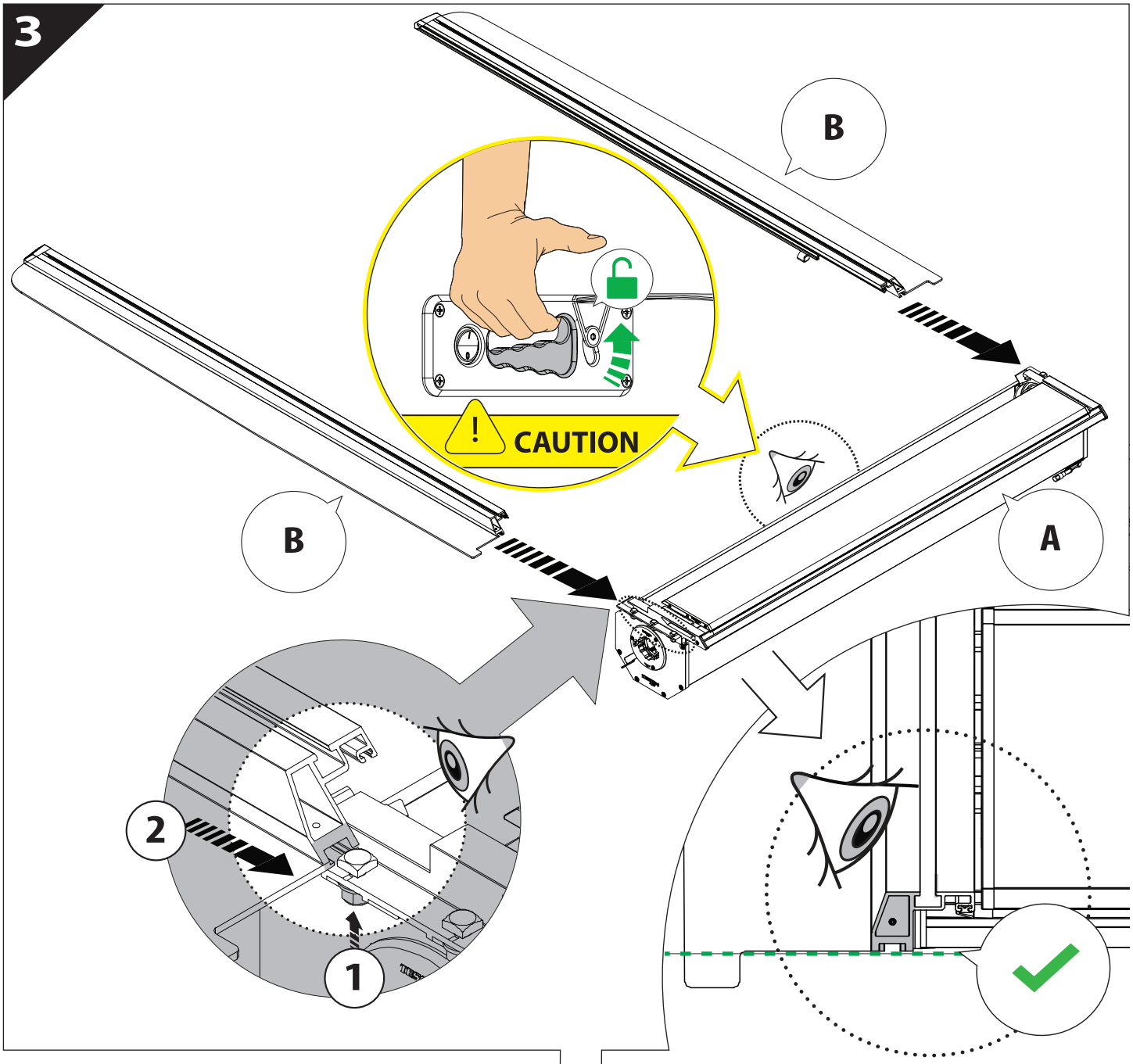
3
B
B
A
CAUTION
2
1

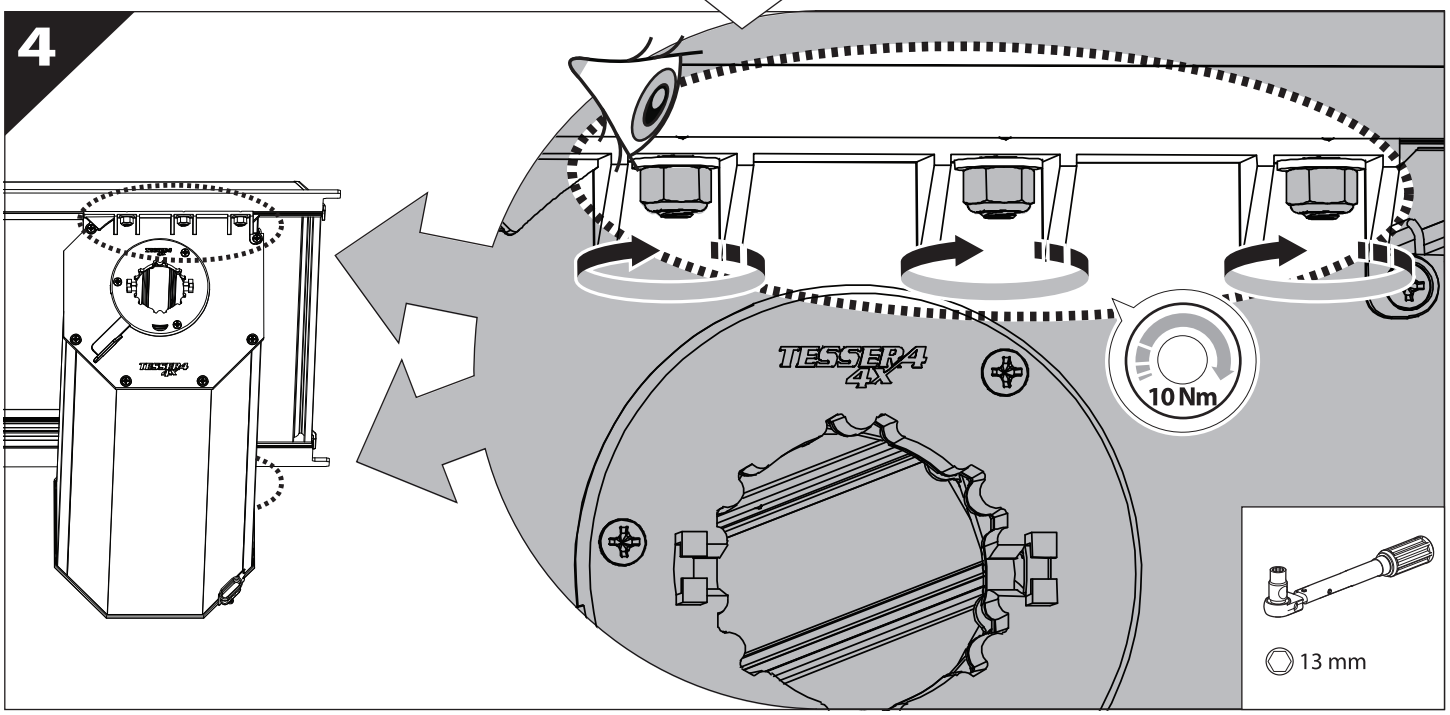
4
TESSERA 4X
10 Nm
13 mm

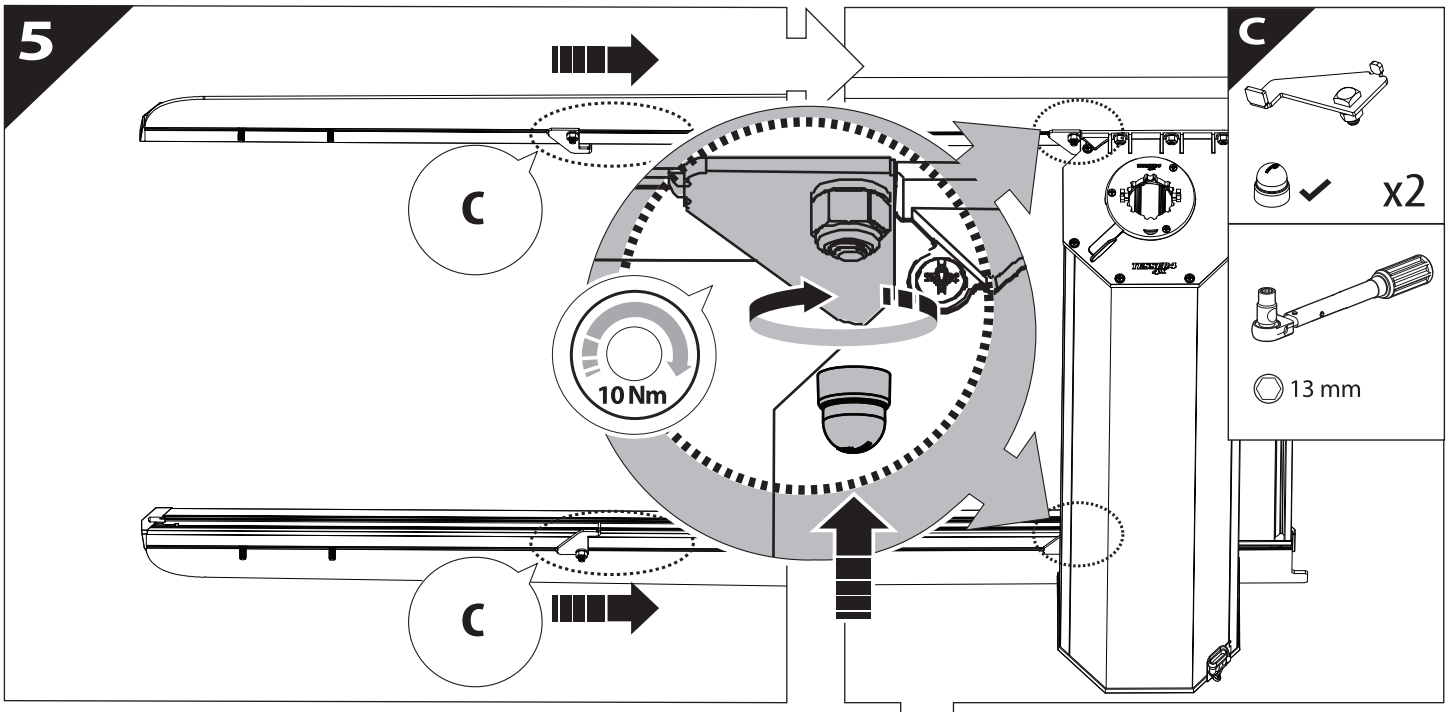
5
C
C
10 Nm
C
x2
13 mm

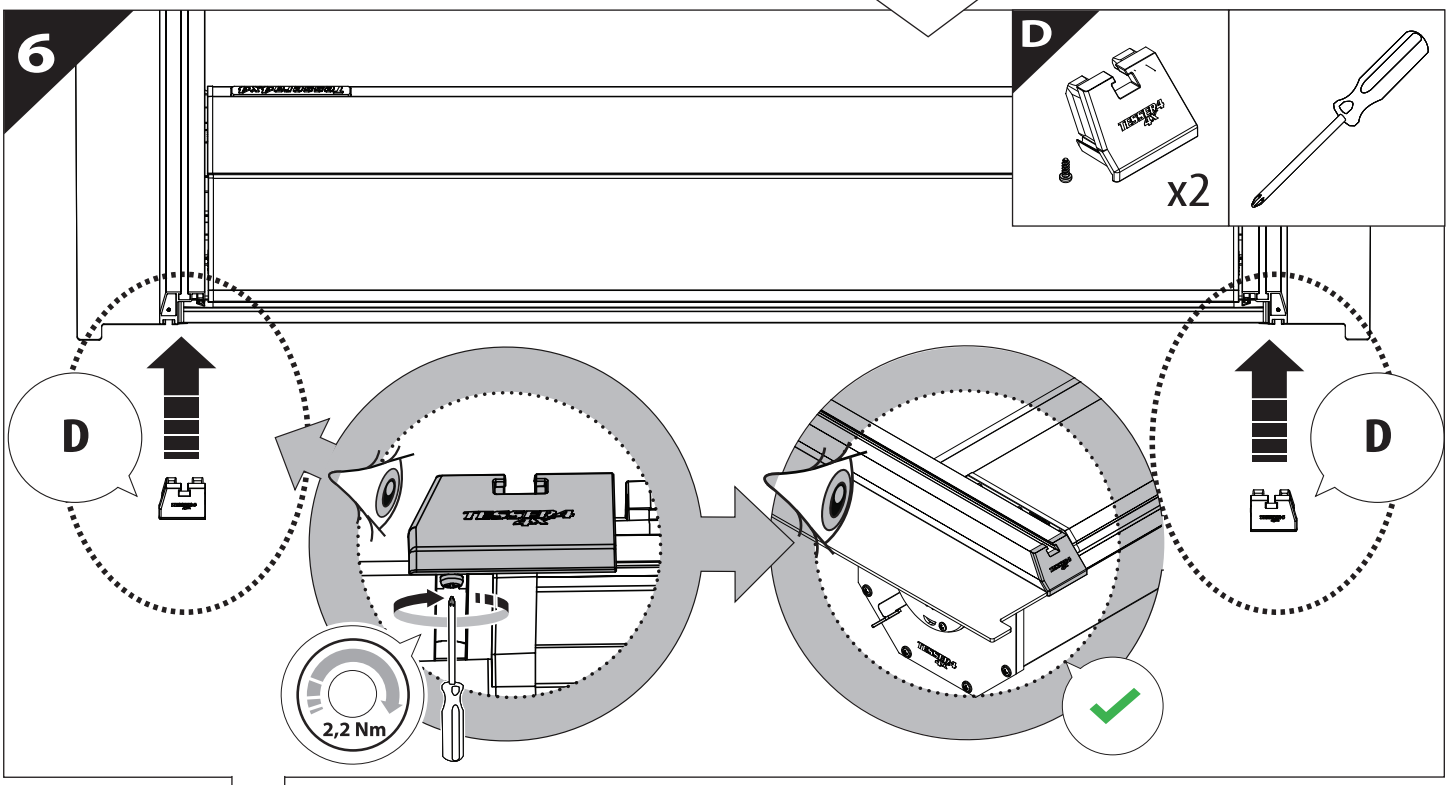
6
D
x2
D
D
2,2 Nm

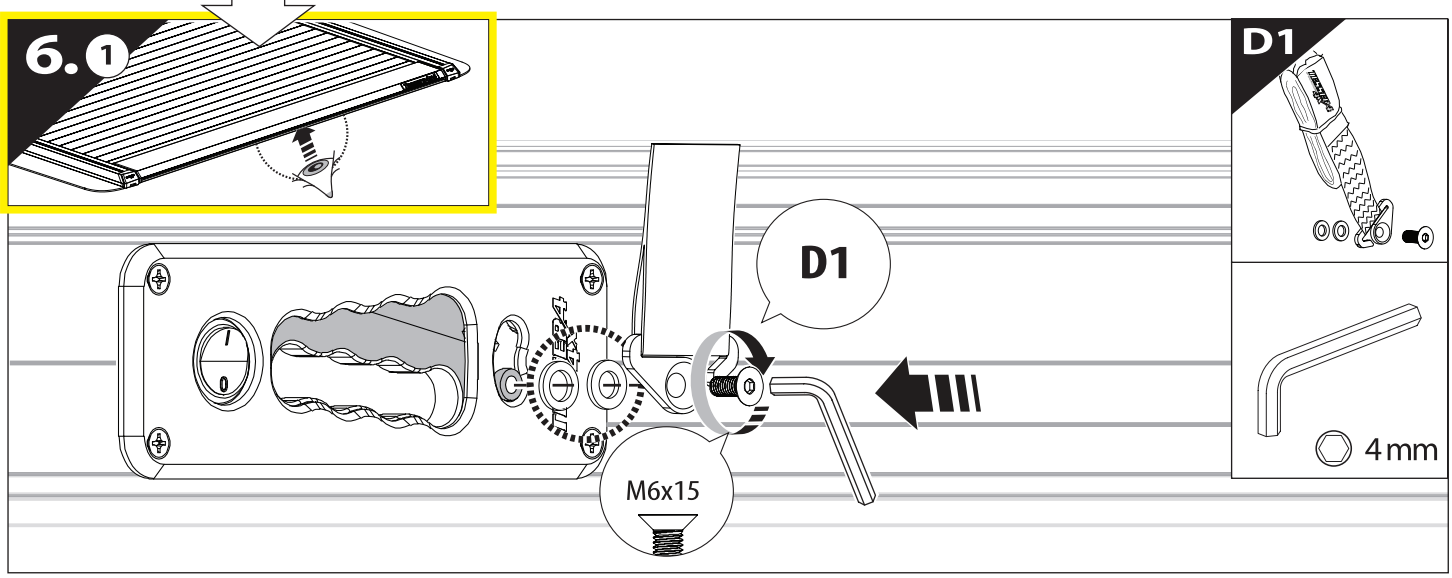
6.1
D1
D1
M6x15
4 mm

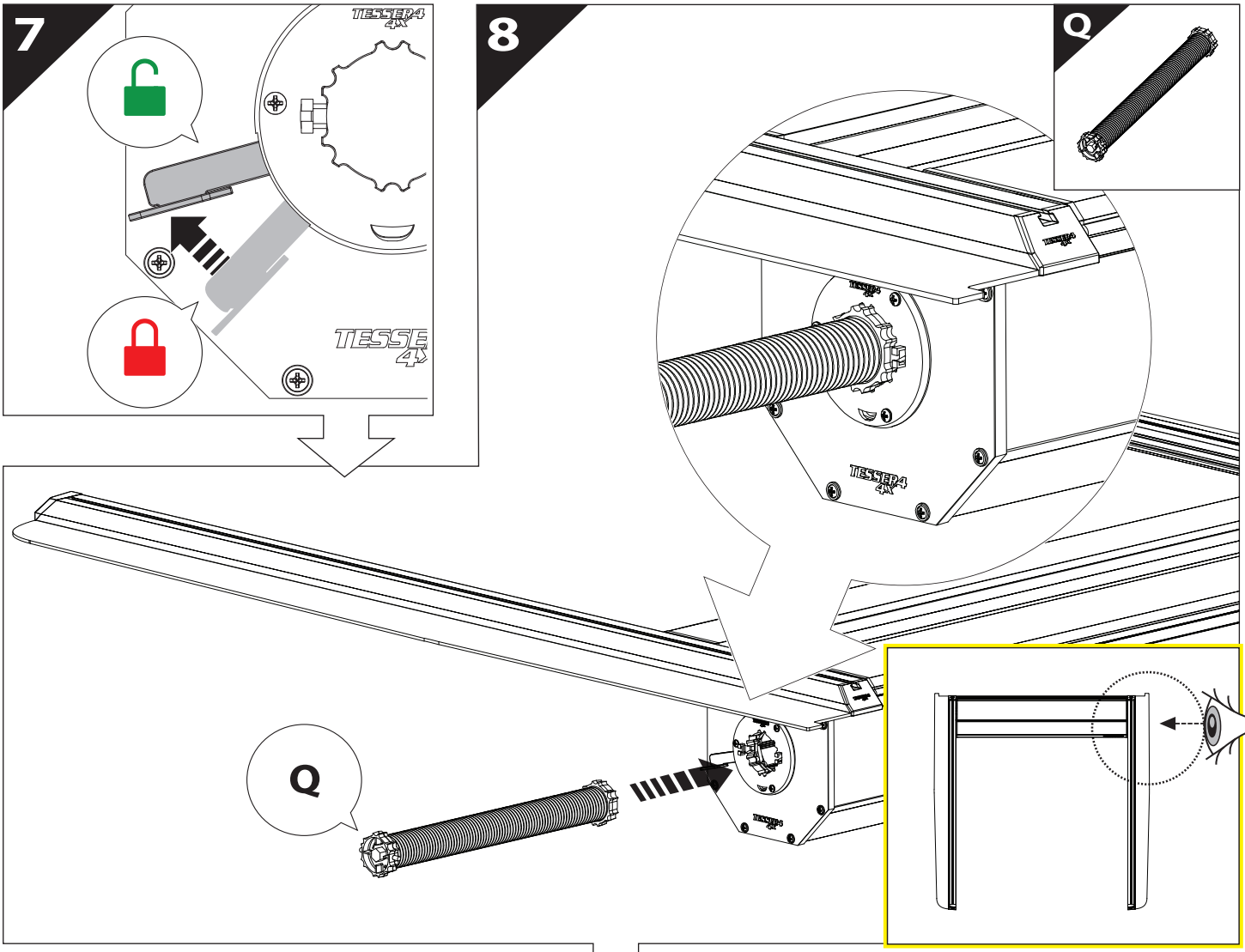
7
8
Q
Q

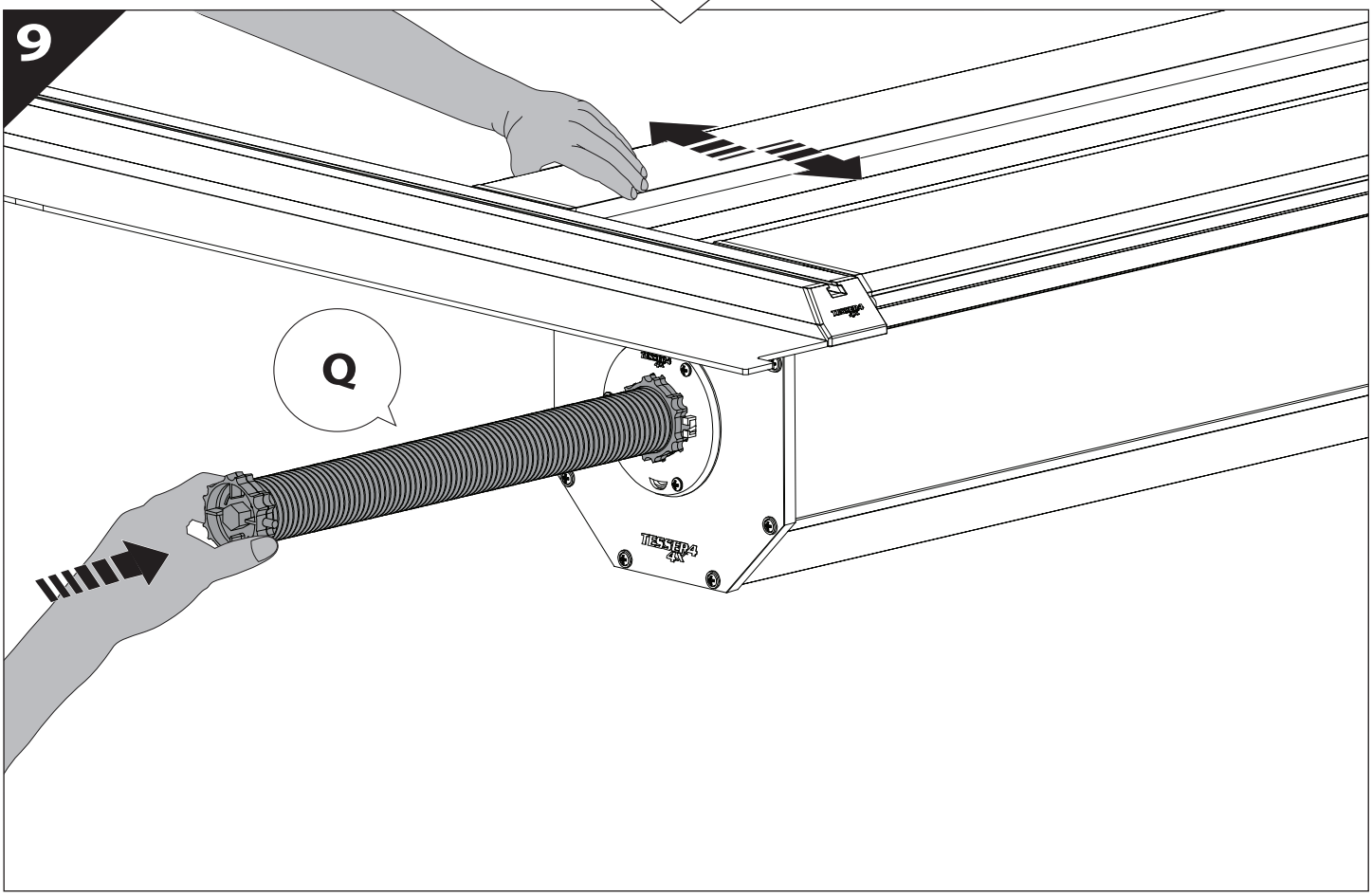
9
Q

10

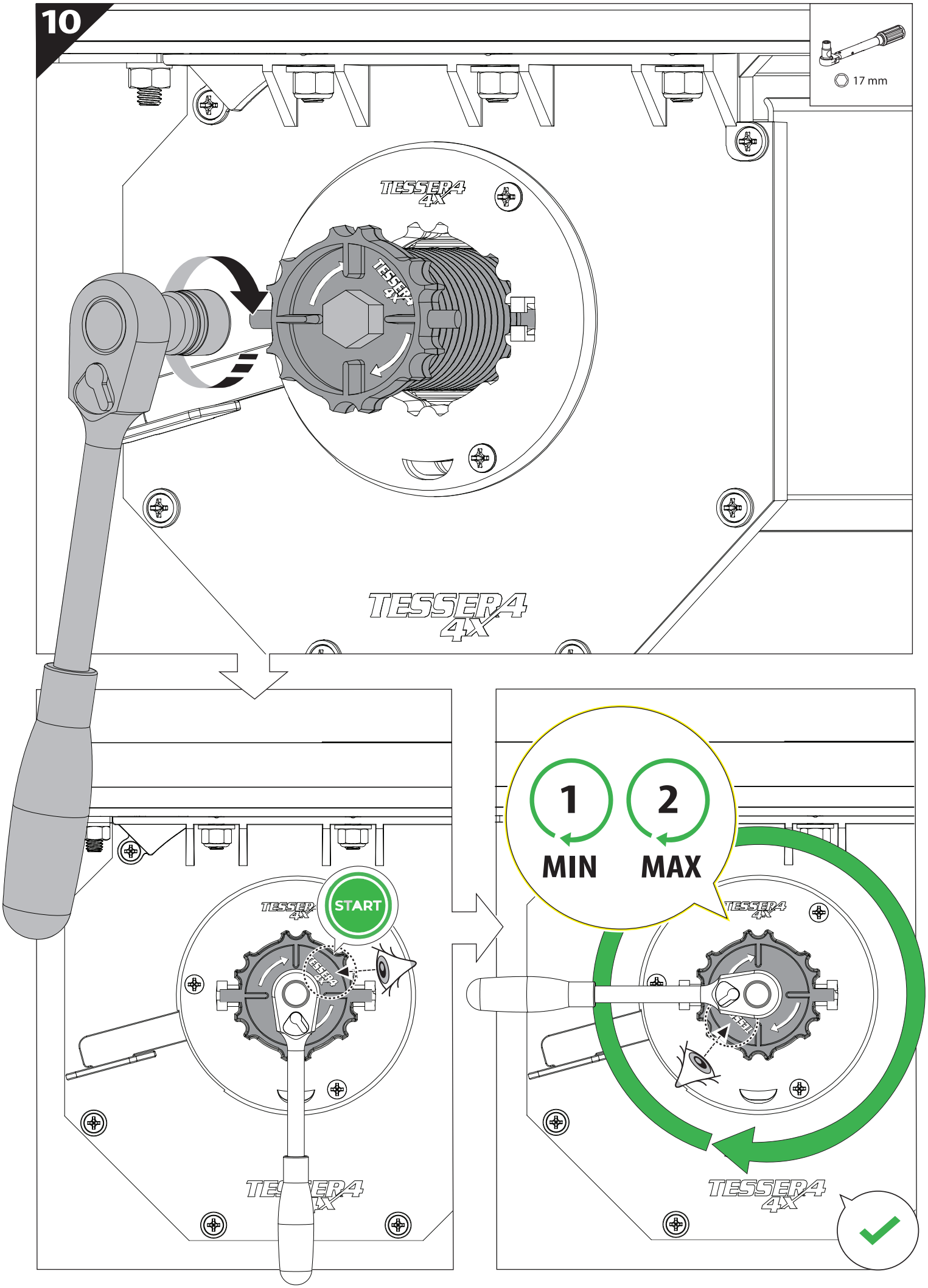

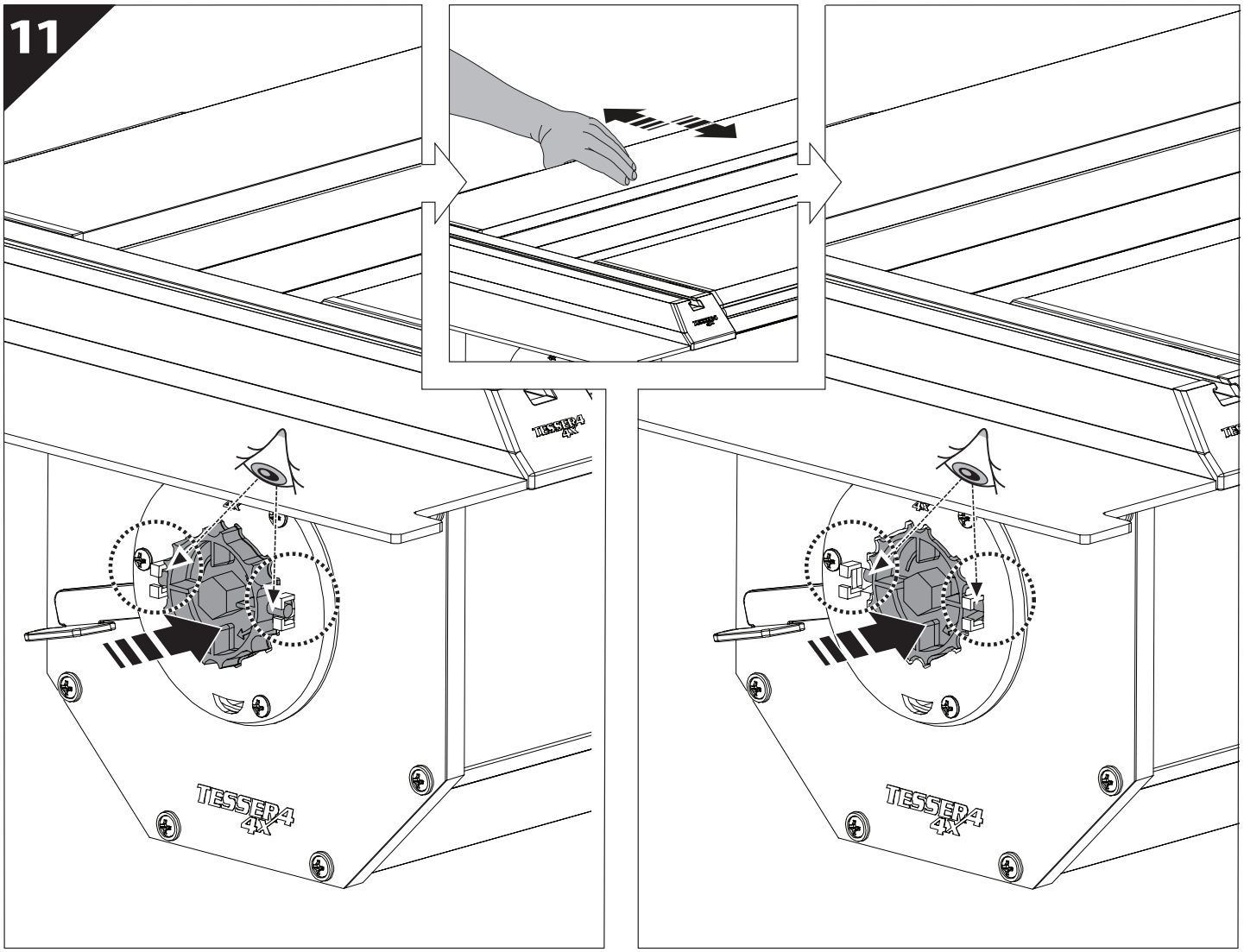
11
TESSERA 4X

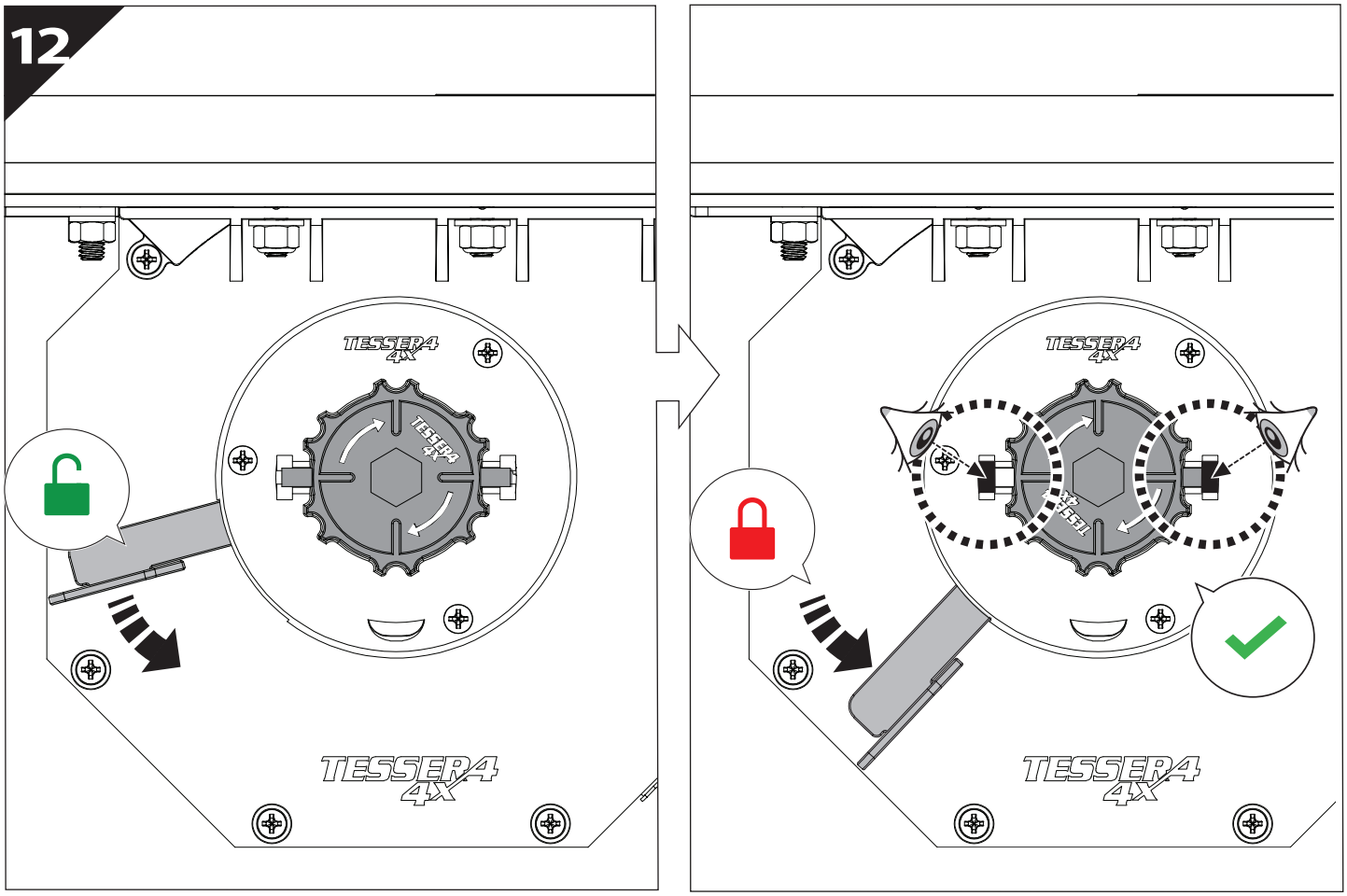
12
TESSERA 4X

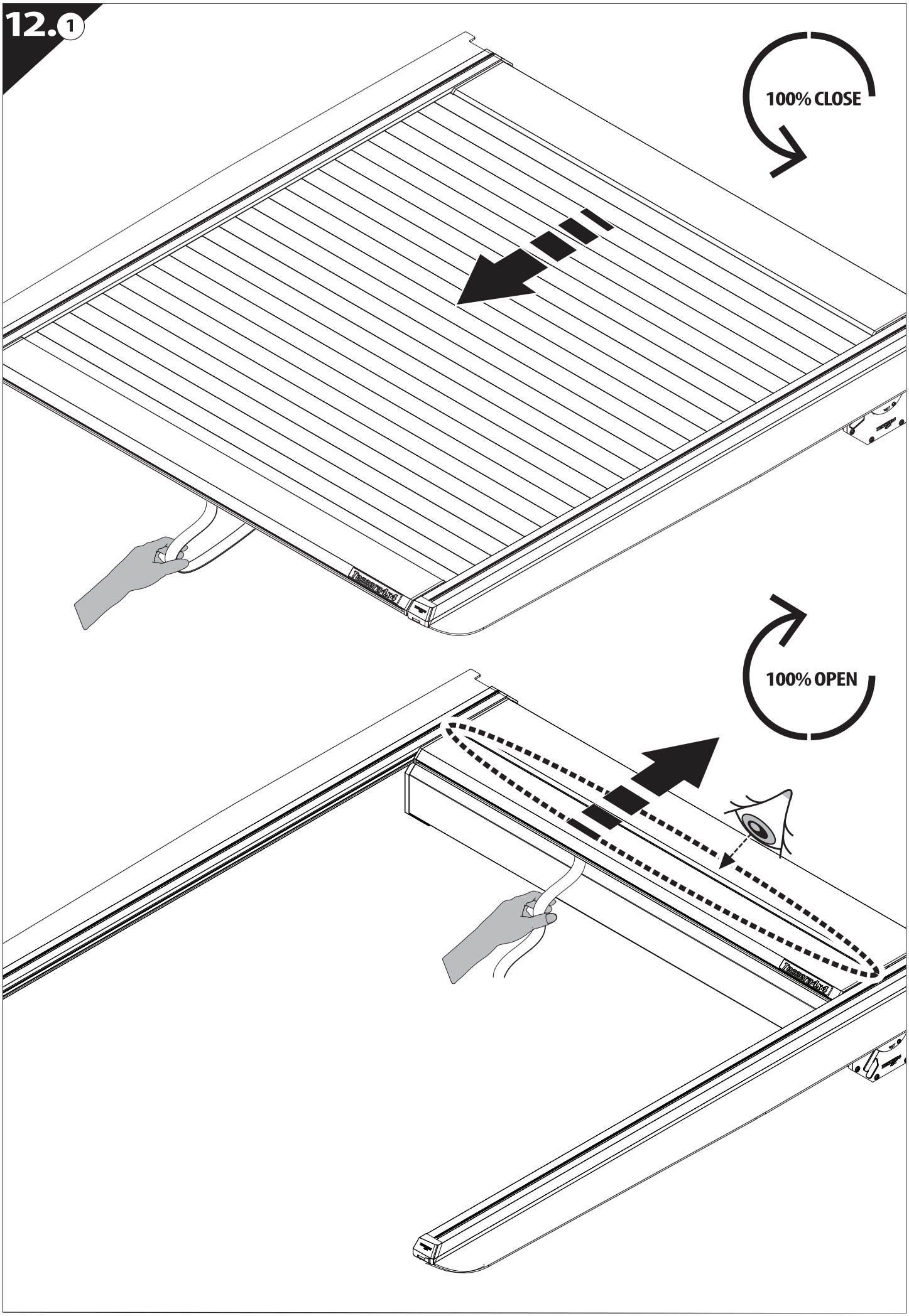
12.1
100% CLOSE
100% OPEN

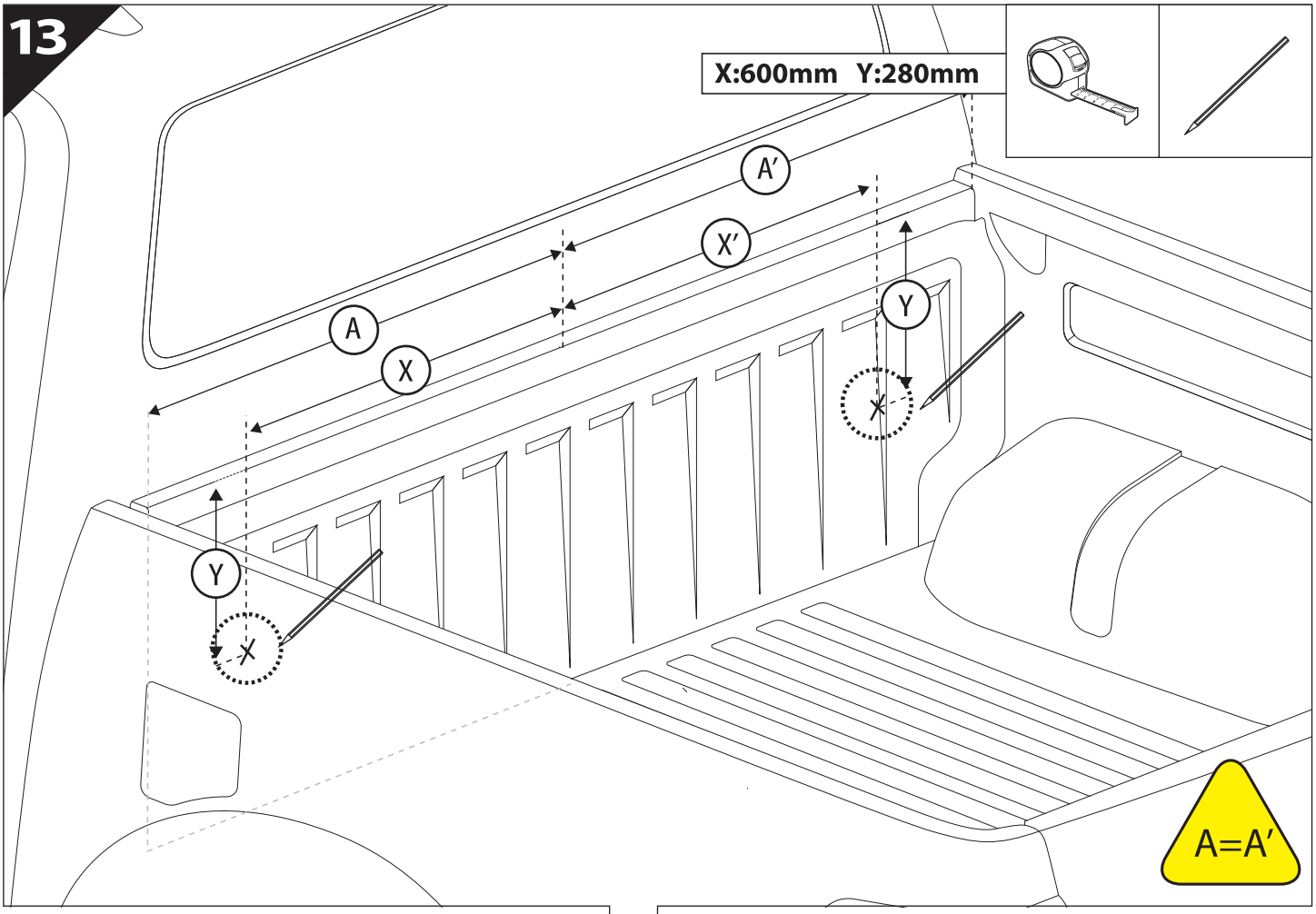
13
X:600mm Y:280mm
A'
X'
A
X
Y
Y
A=A'

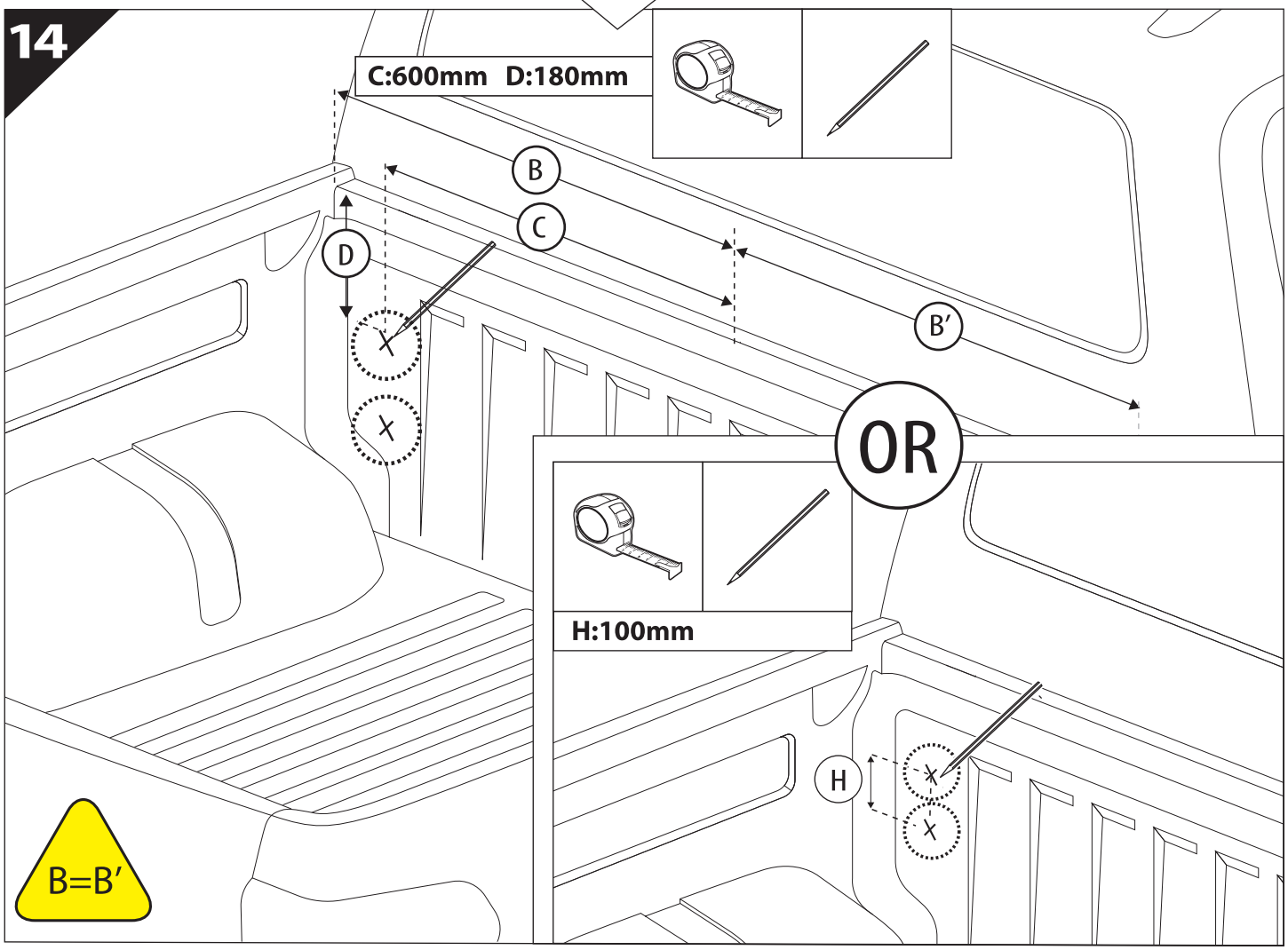
14
C:600mm D:180mm
B
C
D
B'
OR
H:100mm
H
B=B'

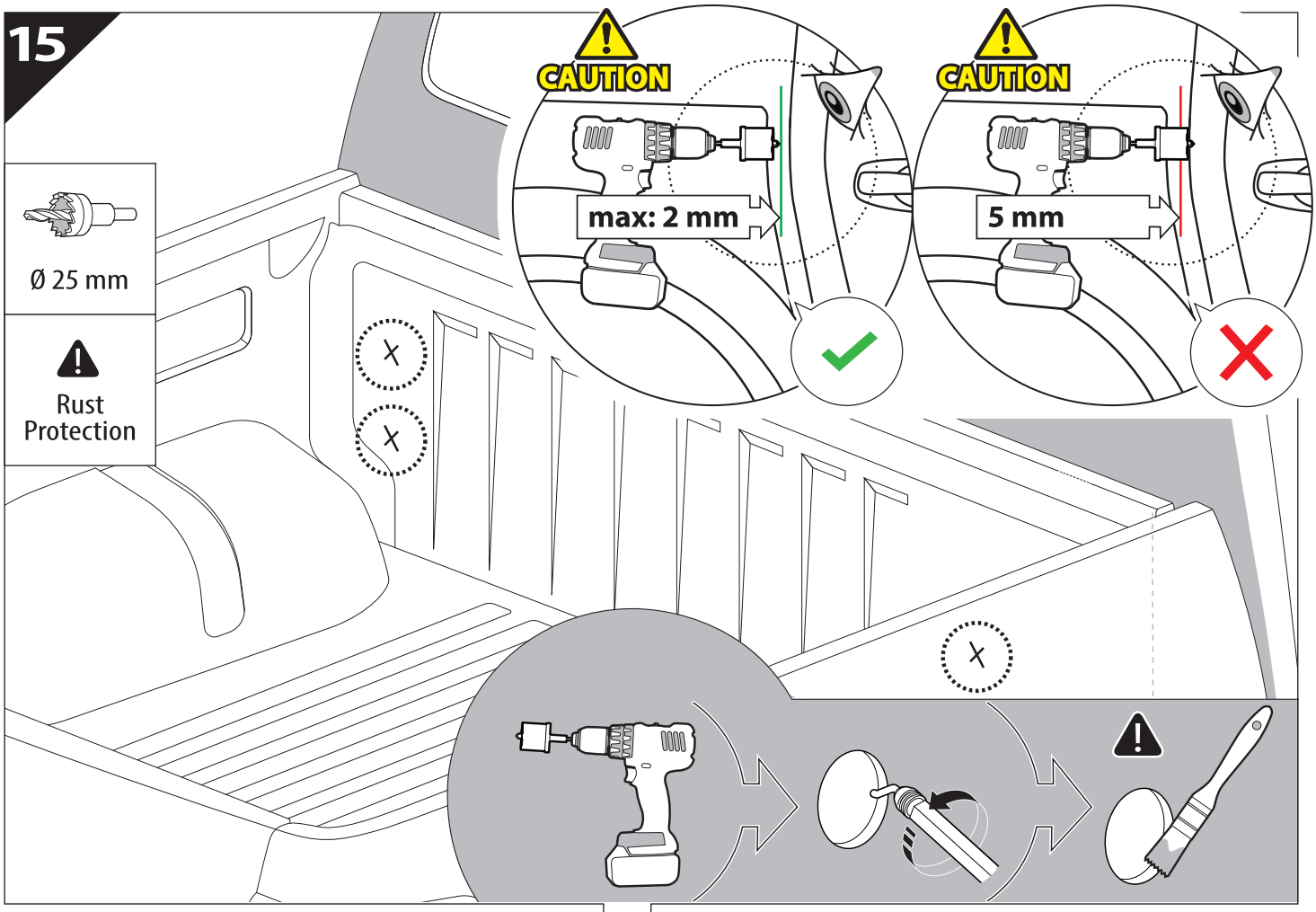
15
Ø 25 mm
Rust Protection
CAUTION
max: 2 mm
CAUTION
5 mm

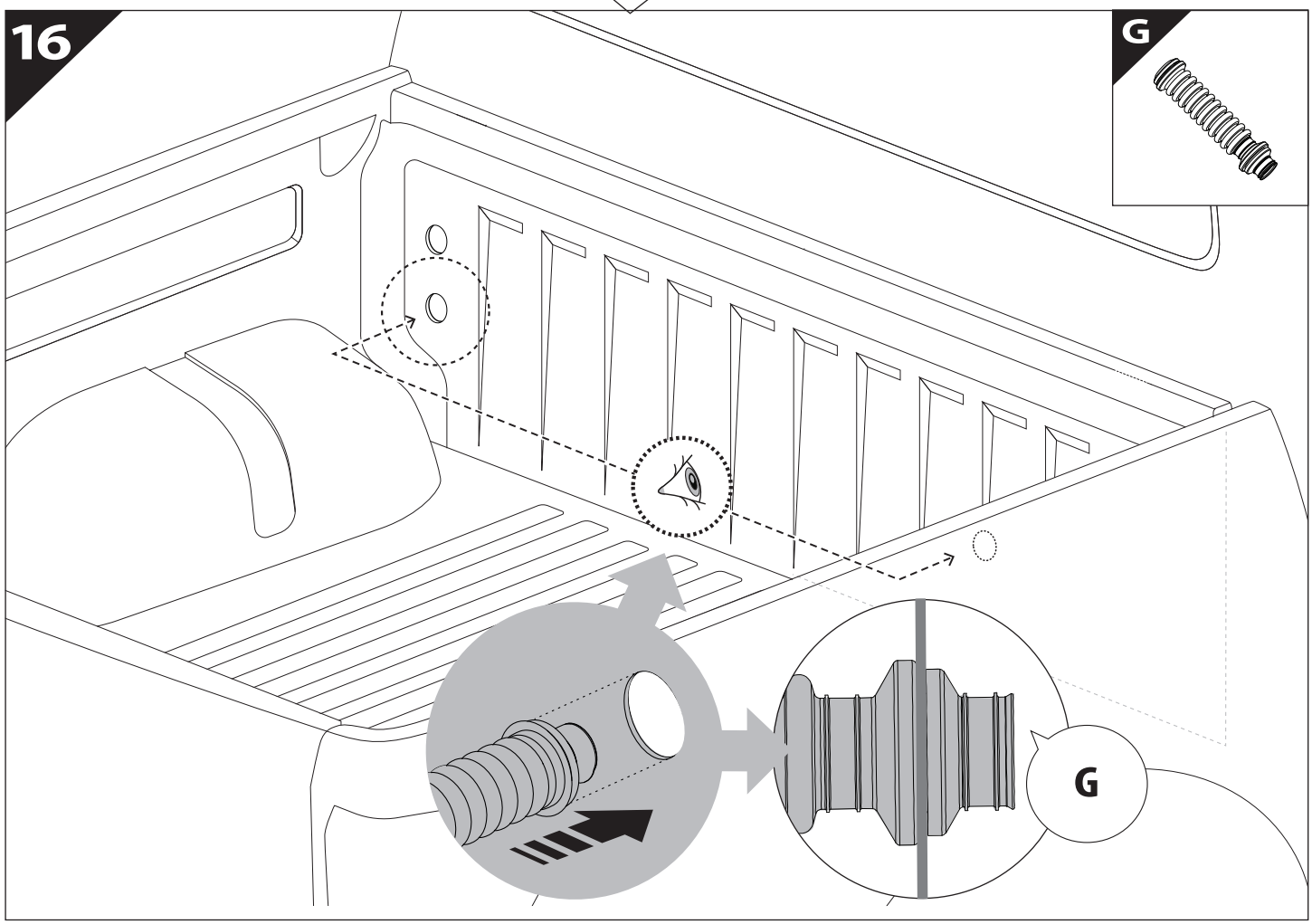
16
G
G

17 Only to be installed by authorized personnel

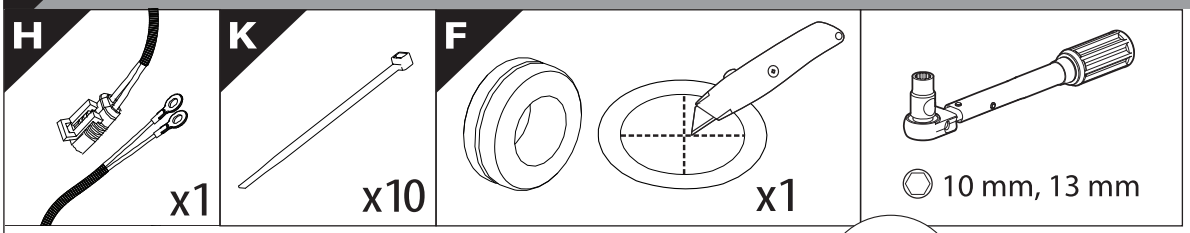

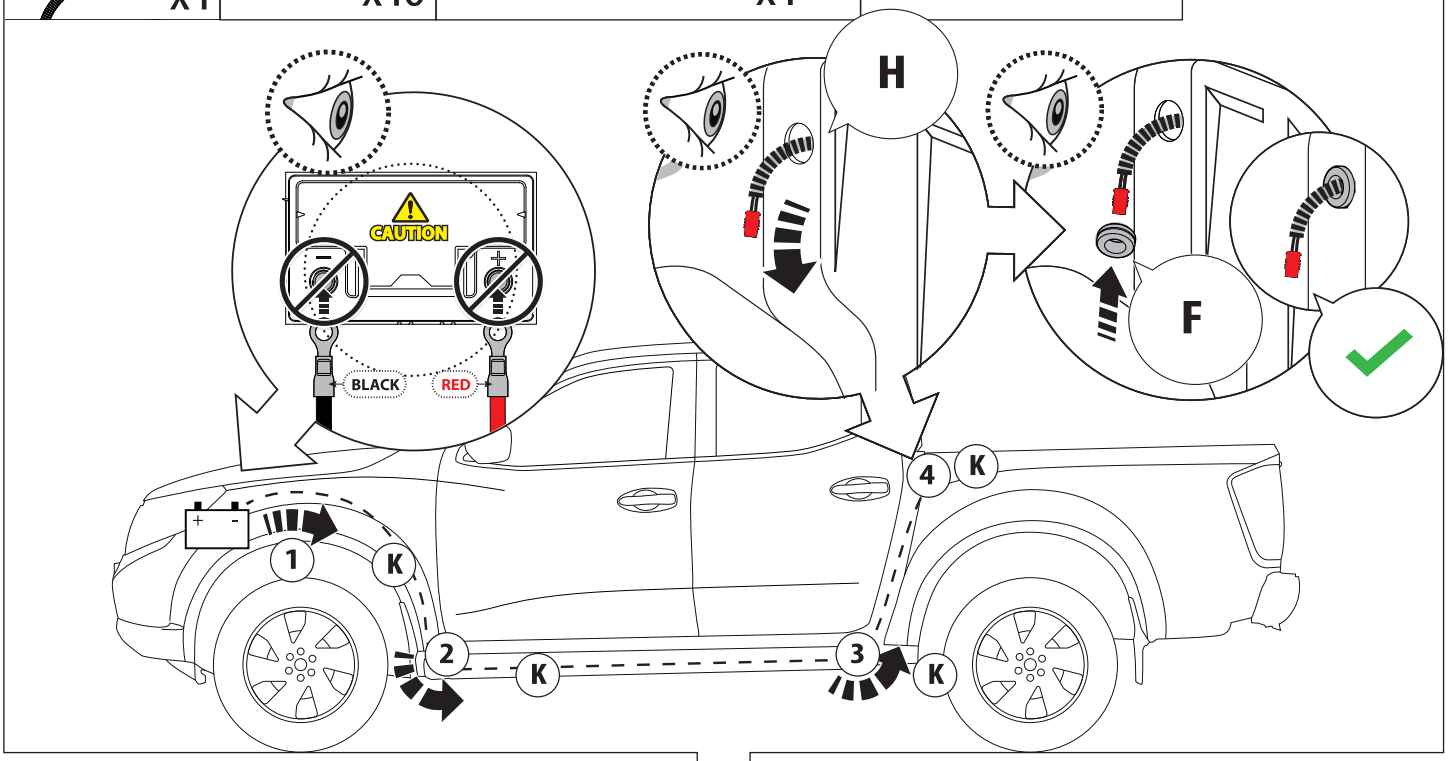

18

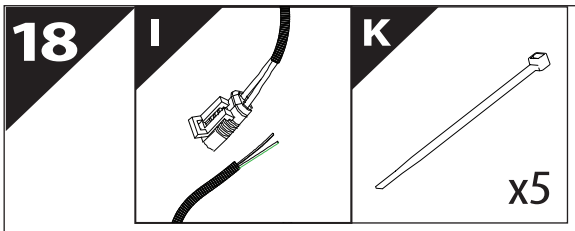

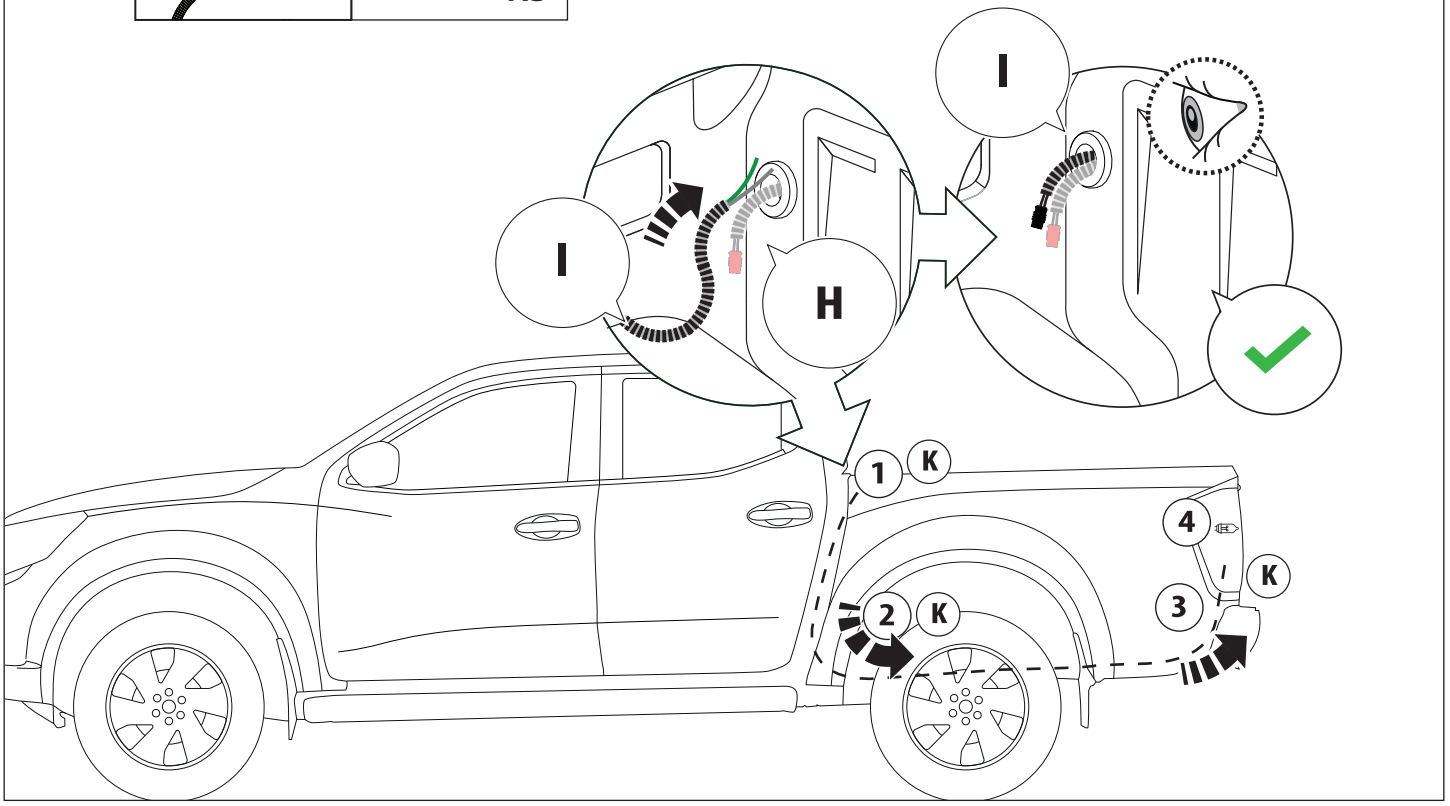

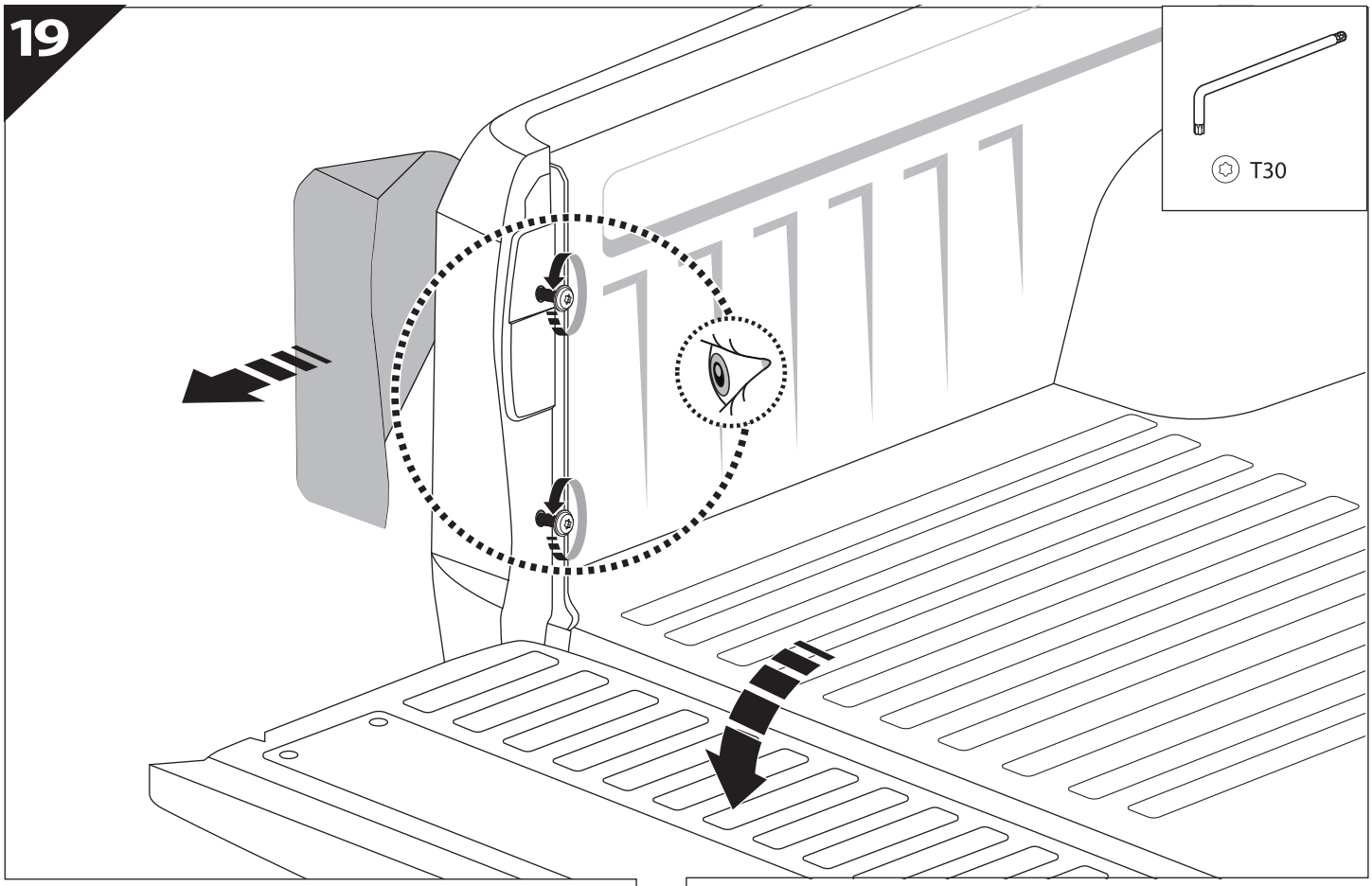
19
T30

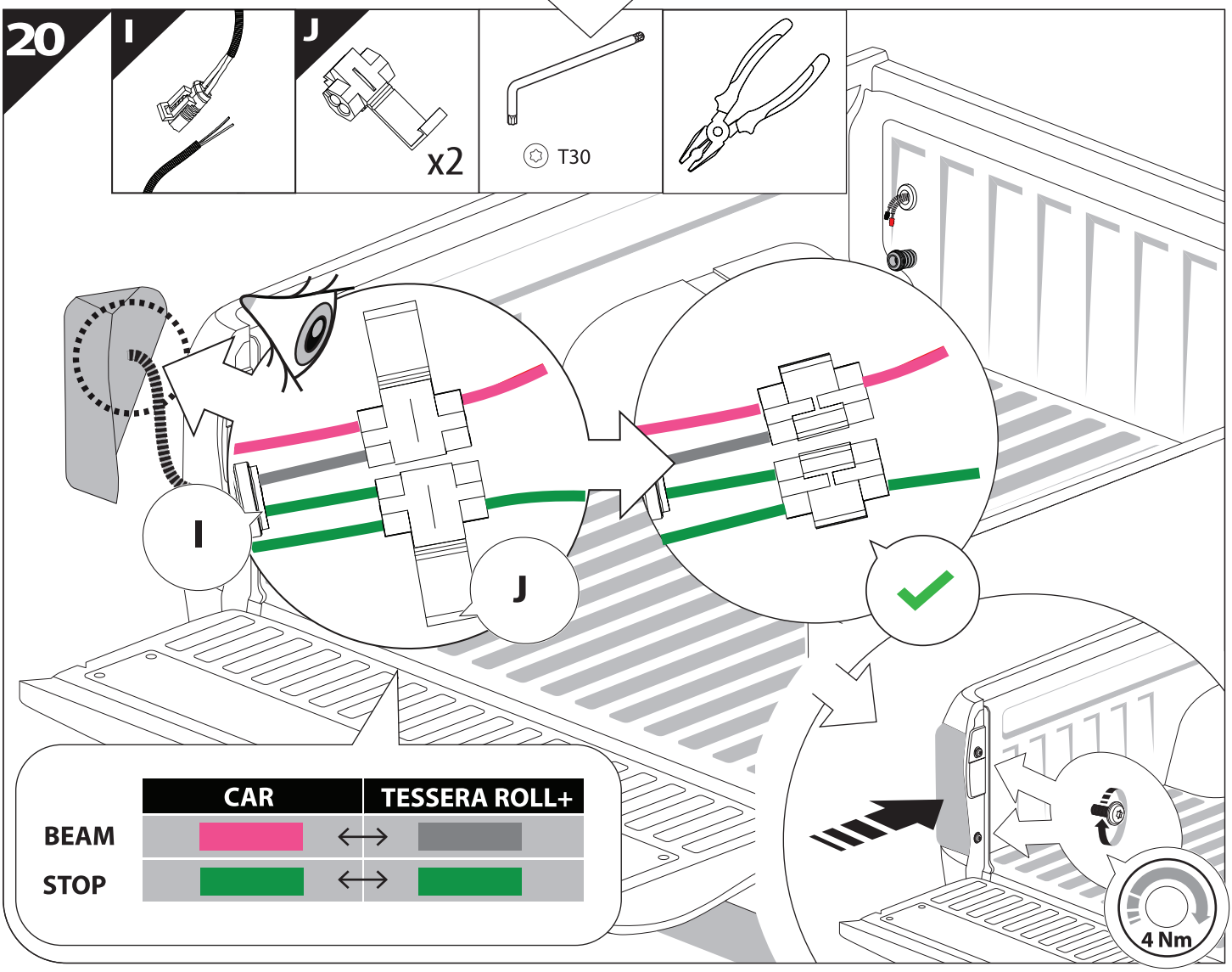
20
I
J
x2
T30
I
J
CAR
TESSERA ROLL+
BEAM
STOP
4 Nm

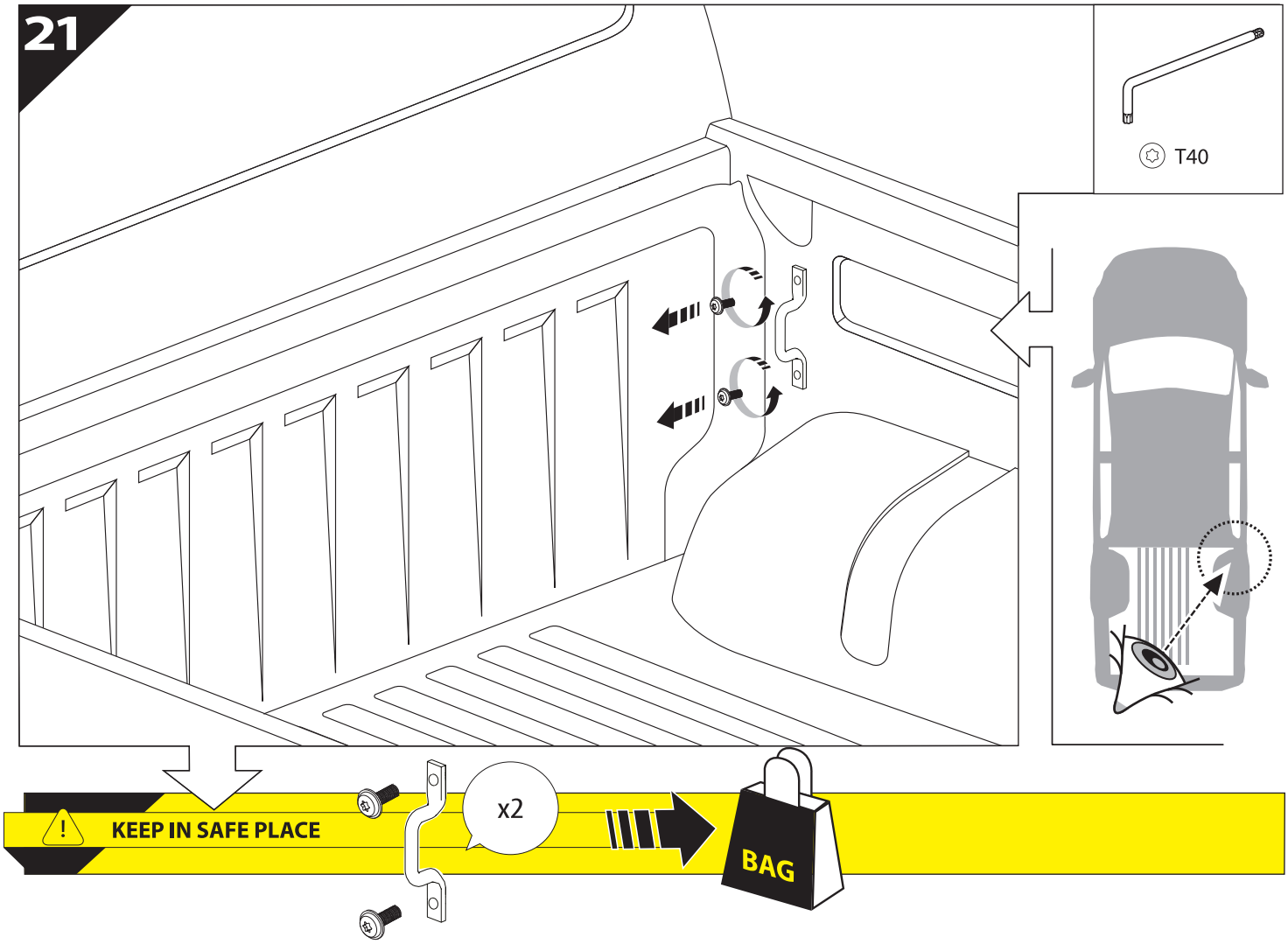
21
T40
KEEP IN SAFE PLACE
x2
BAG

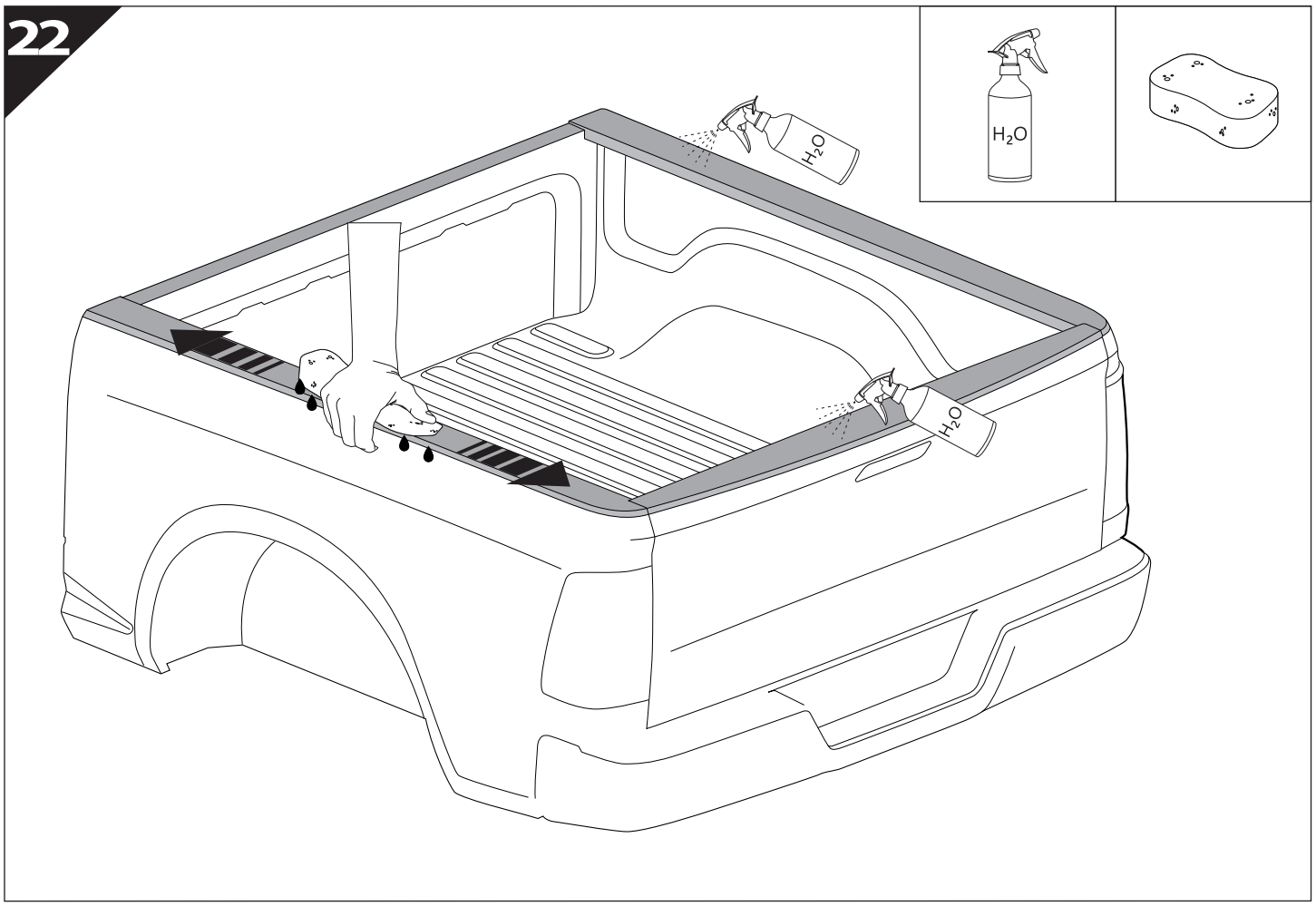
22
H_2O
H_2O
H_2O

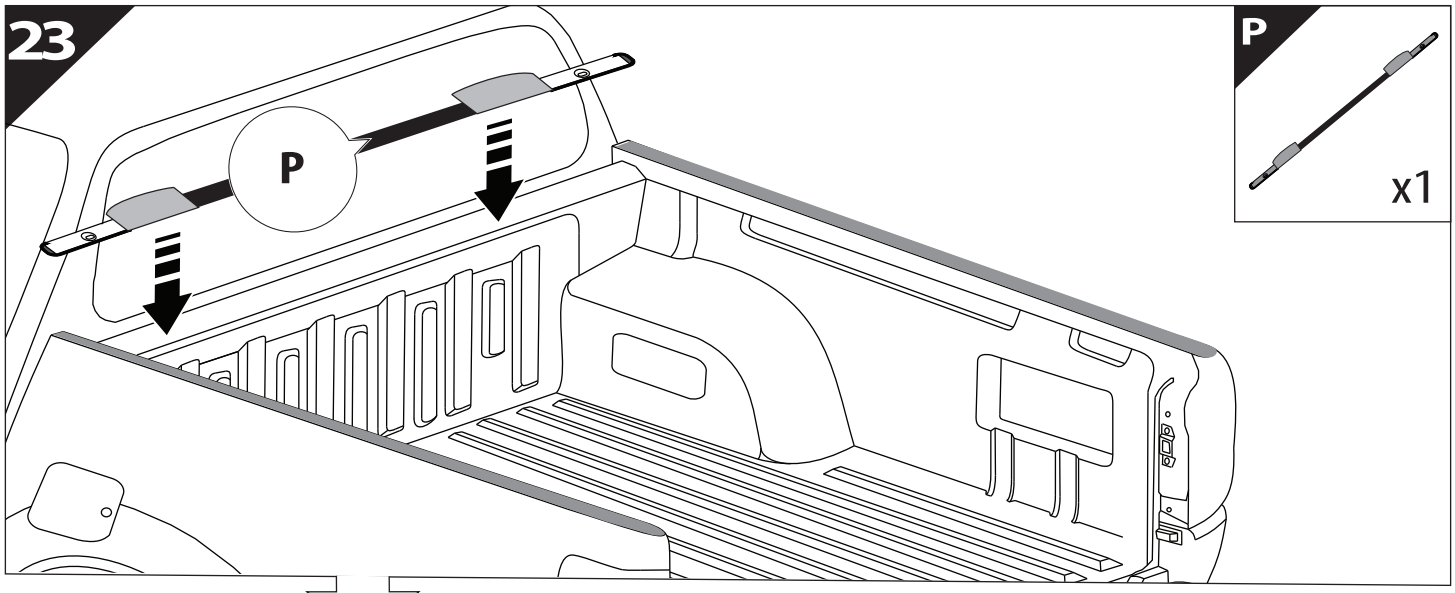
23
P
P
x1

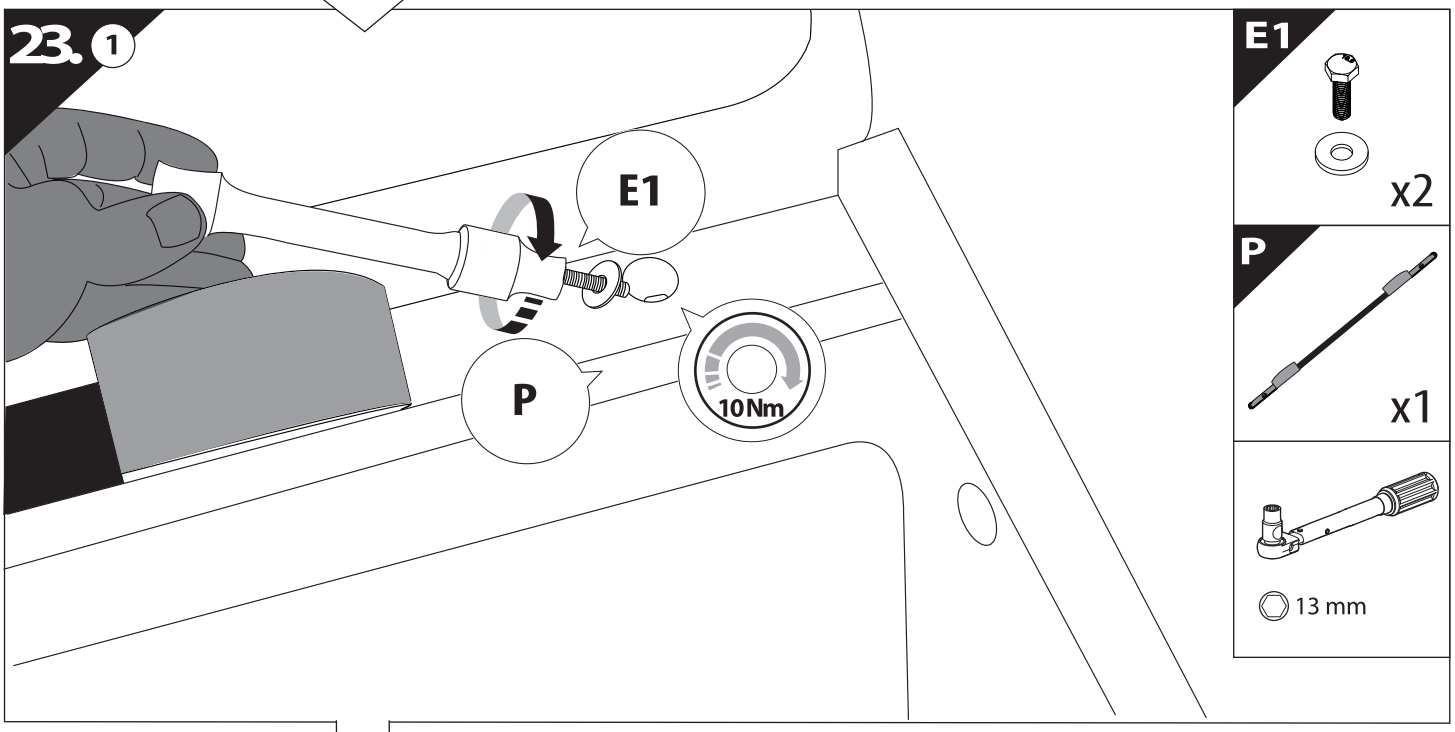
23. 1
E1
P
10 Nm
E1
x2
P
x1
13 mm

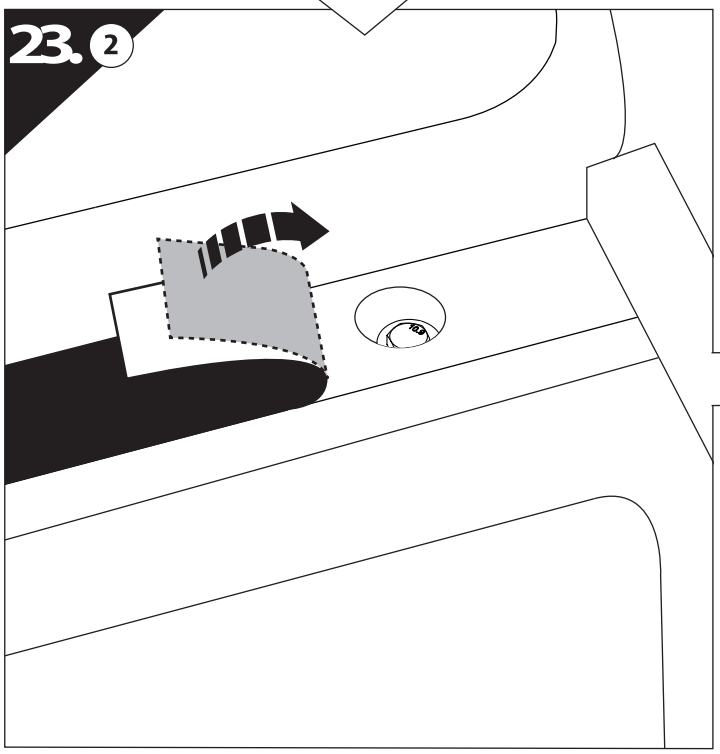
23. 2

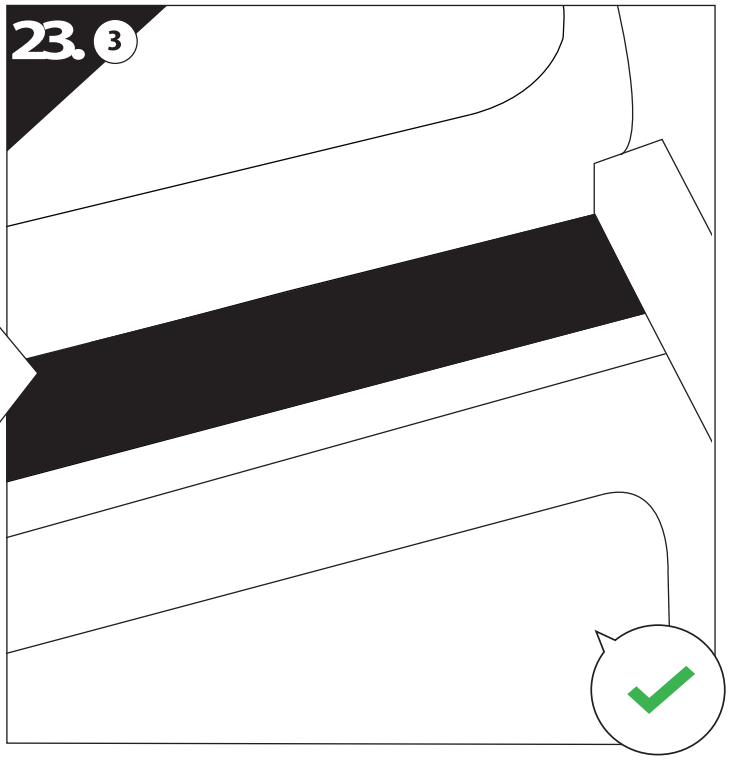
23. 3

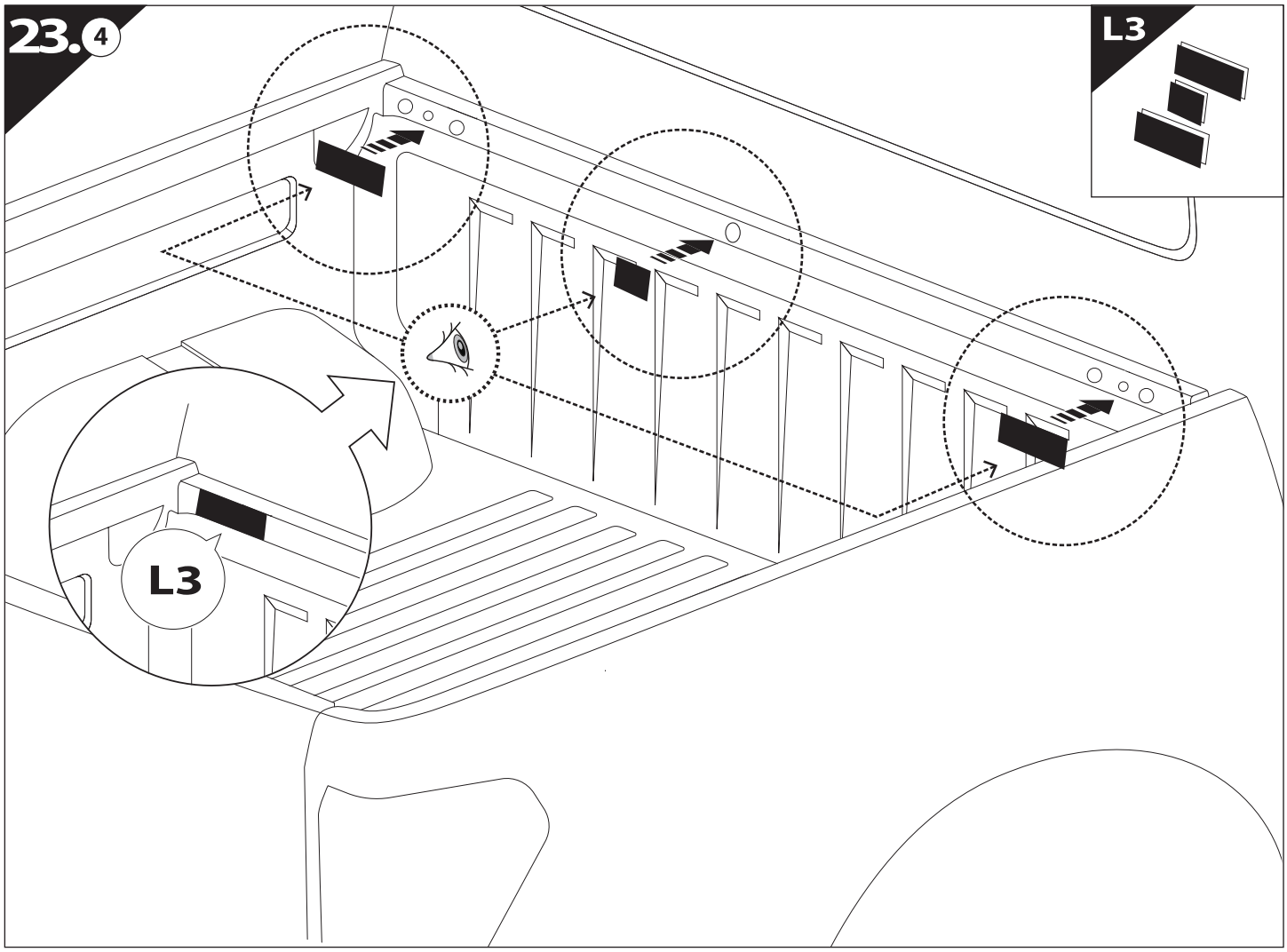
23.4
L3
L3

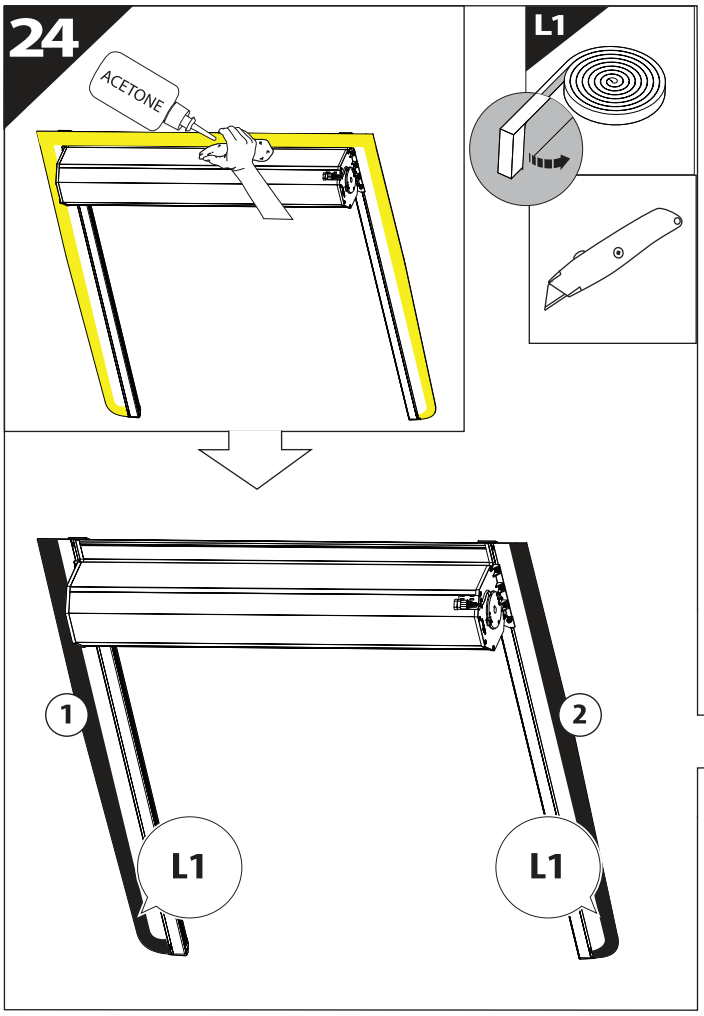
24
ACETONE
L1
1
2
L1
L1

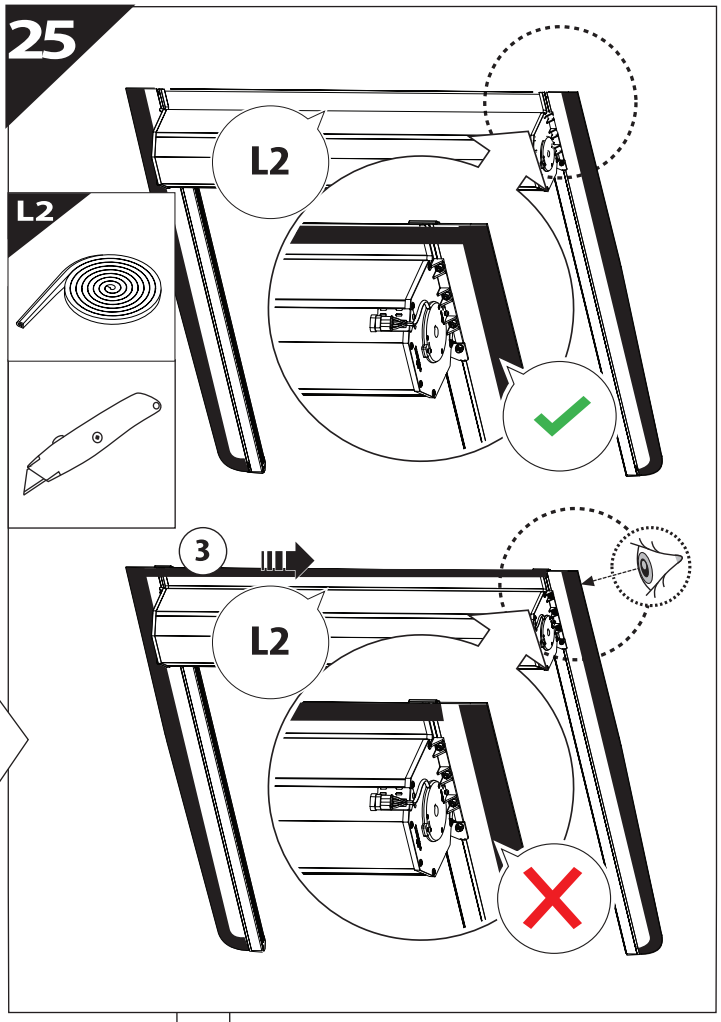
25
L2
L2
3
L2

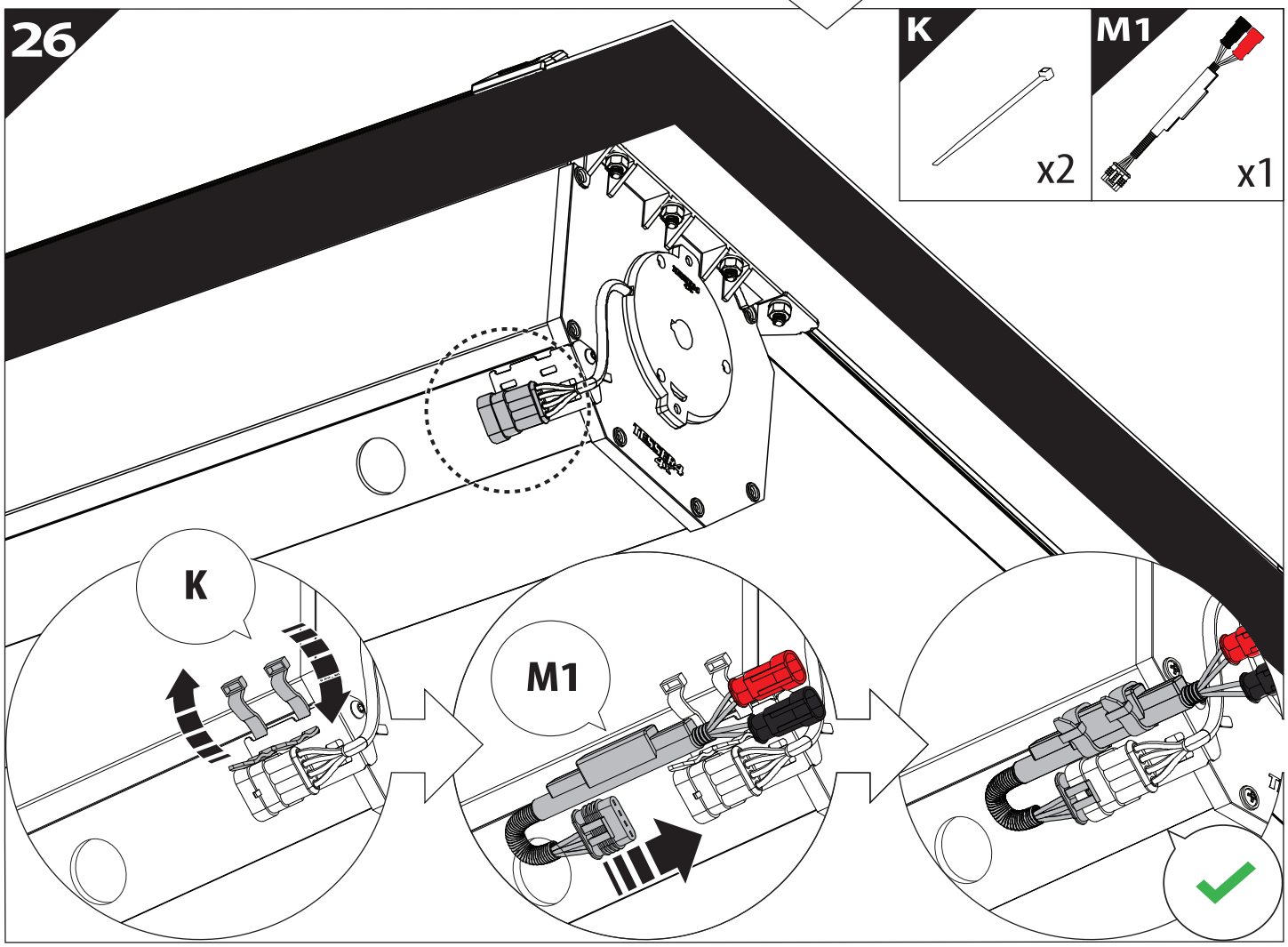
26
K
x2
M1
x1
K
M1

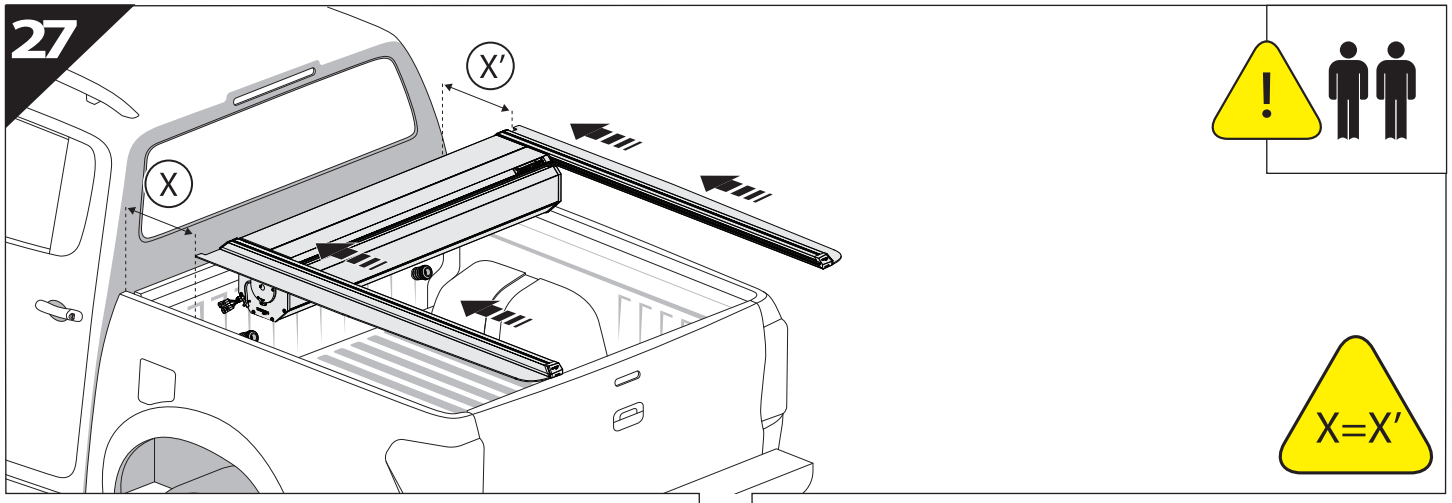
27
X'
X
X=X'

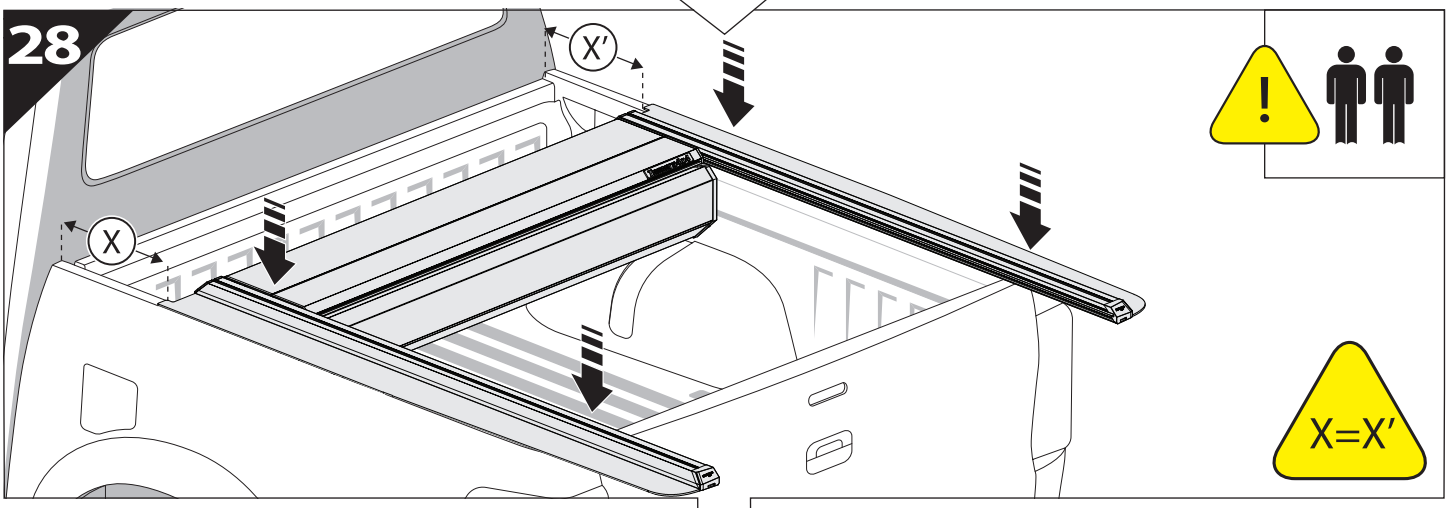
28
X'
X
X=X'

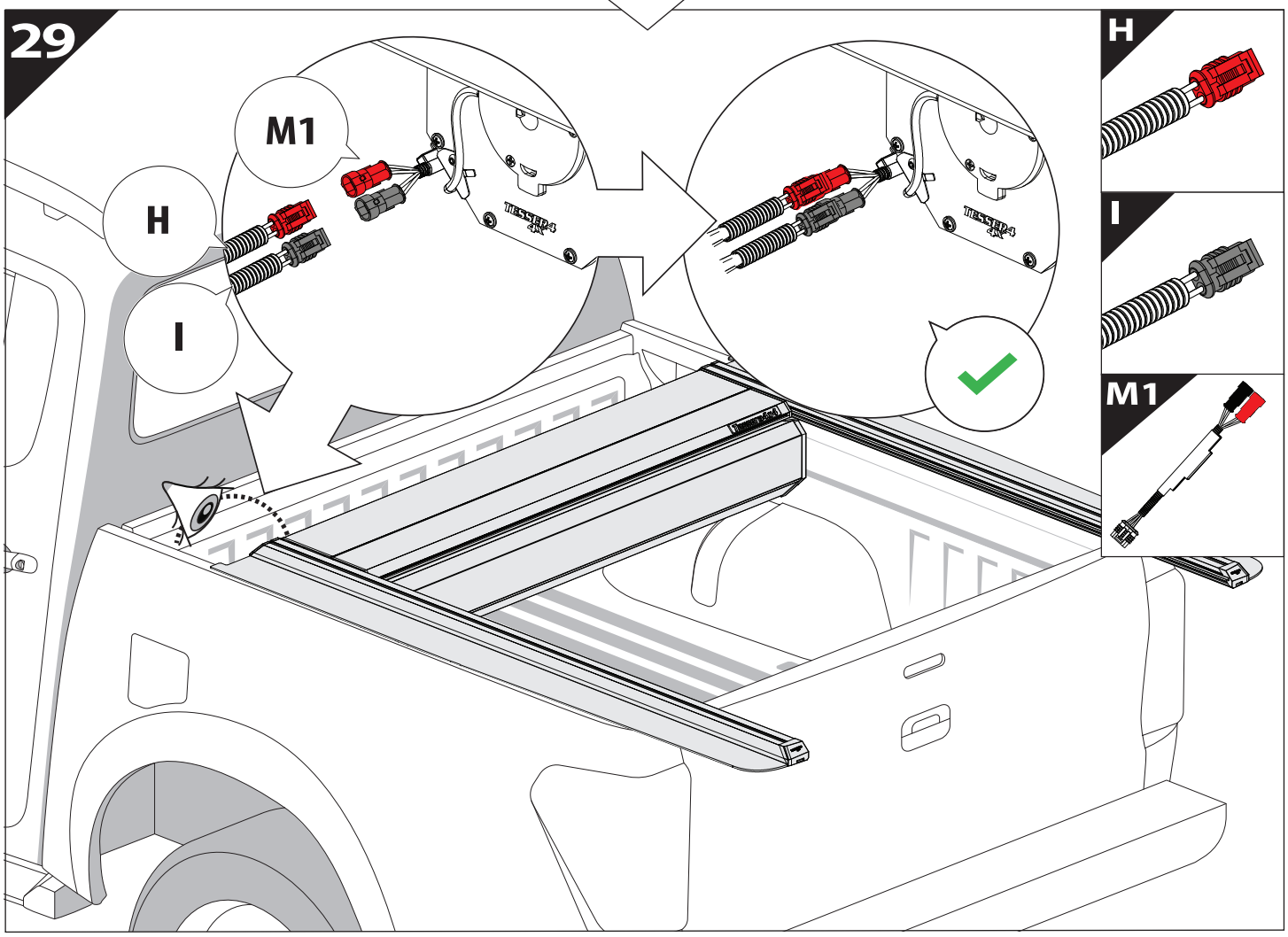
29
M1
H
I
H
I
M1

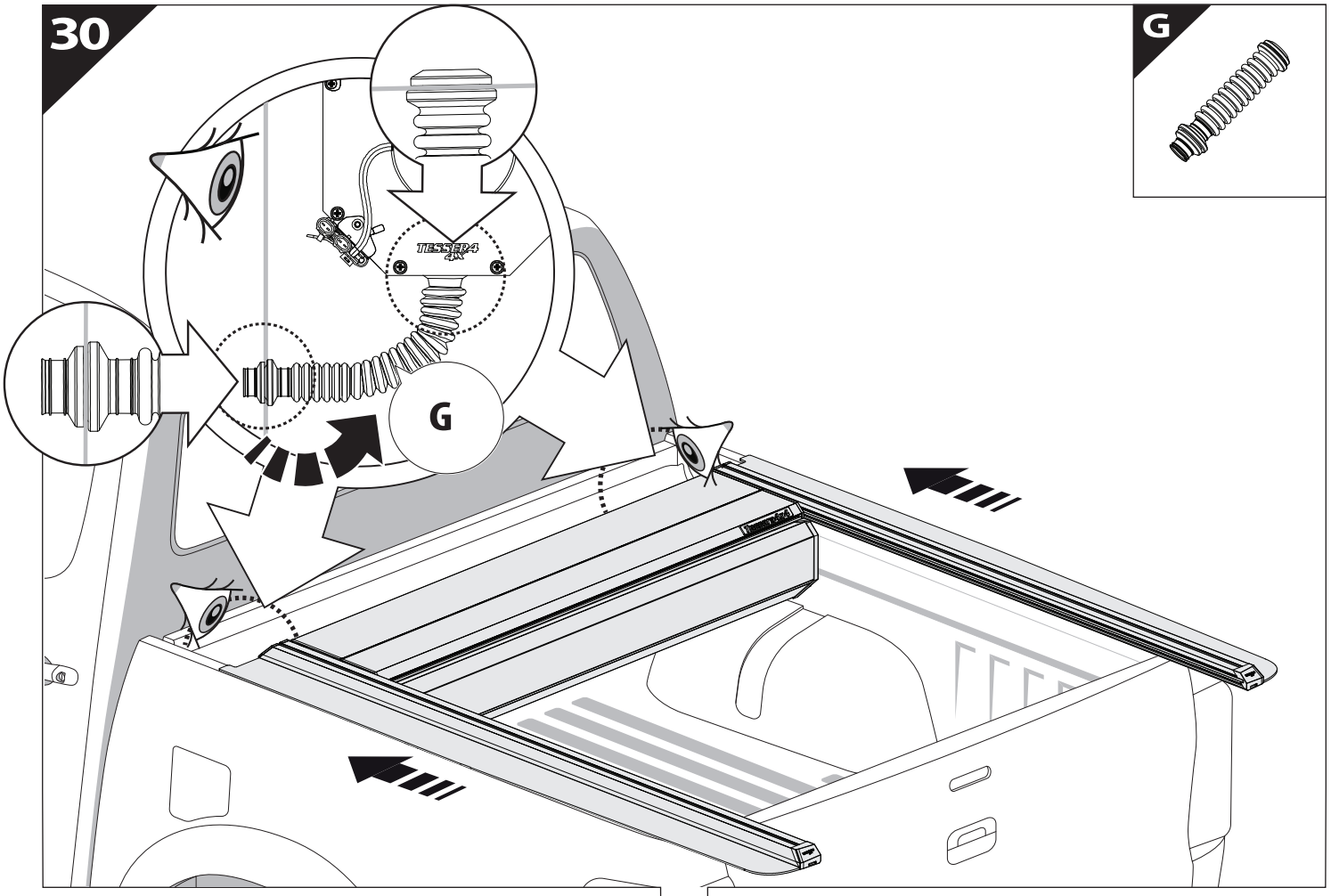
30
G
G
TESSER-4
4x4

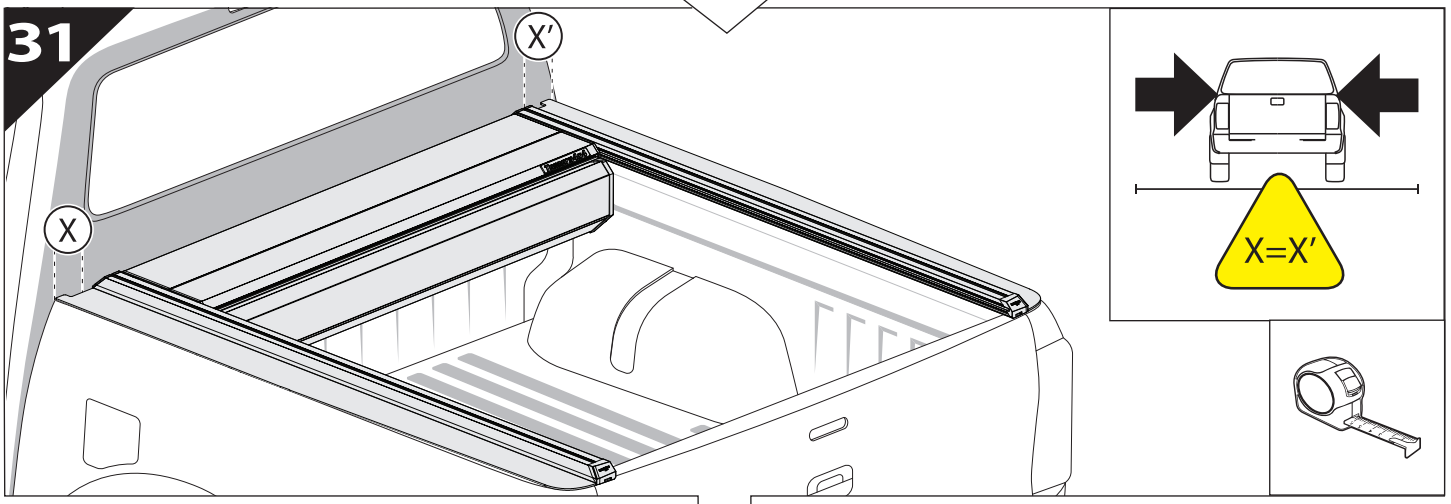
31
X'
X
X=X'

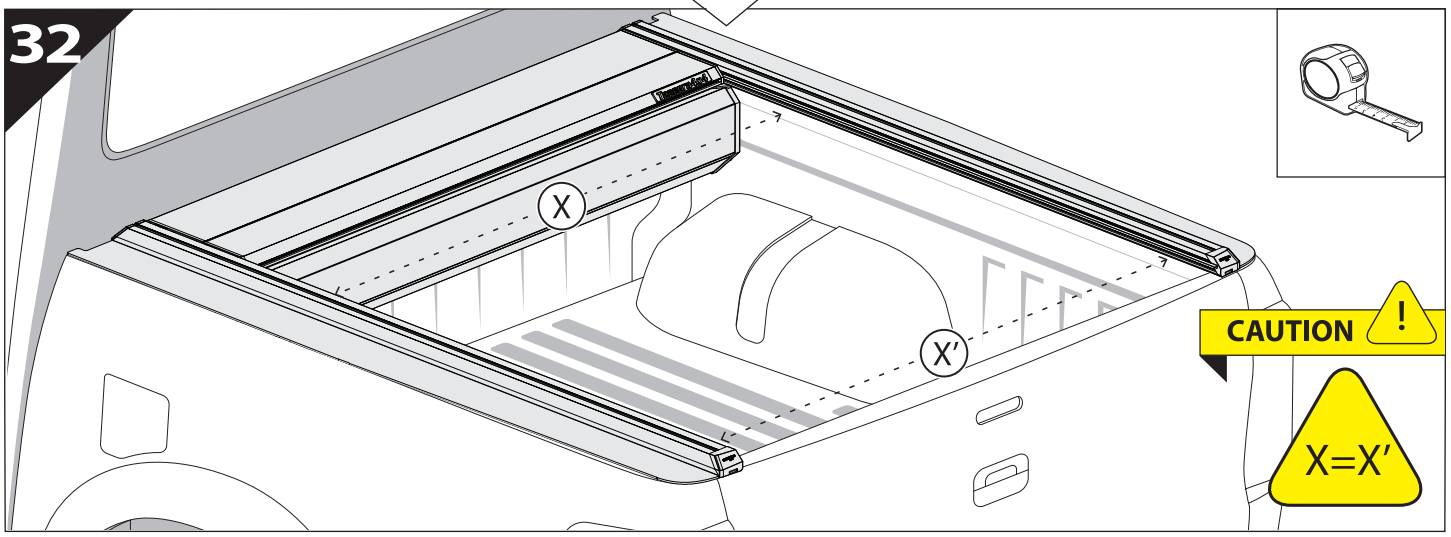
32
X
X'
CAUTION
!
X=X'

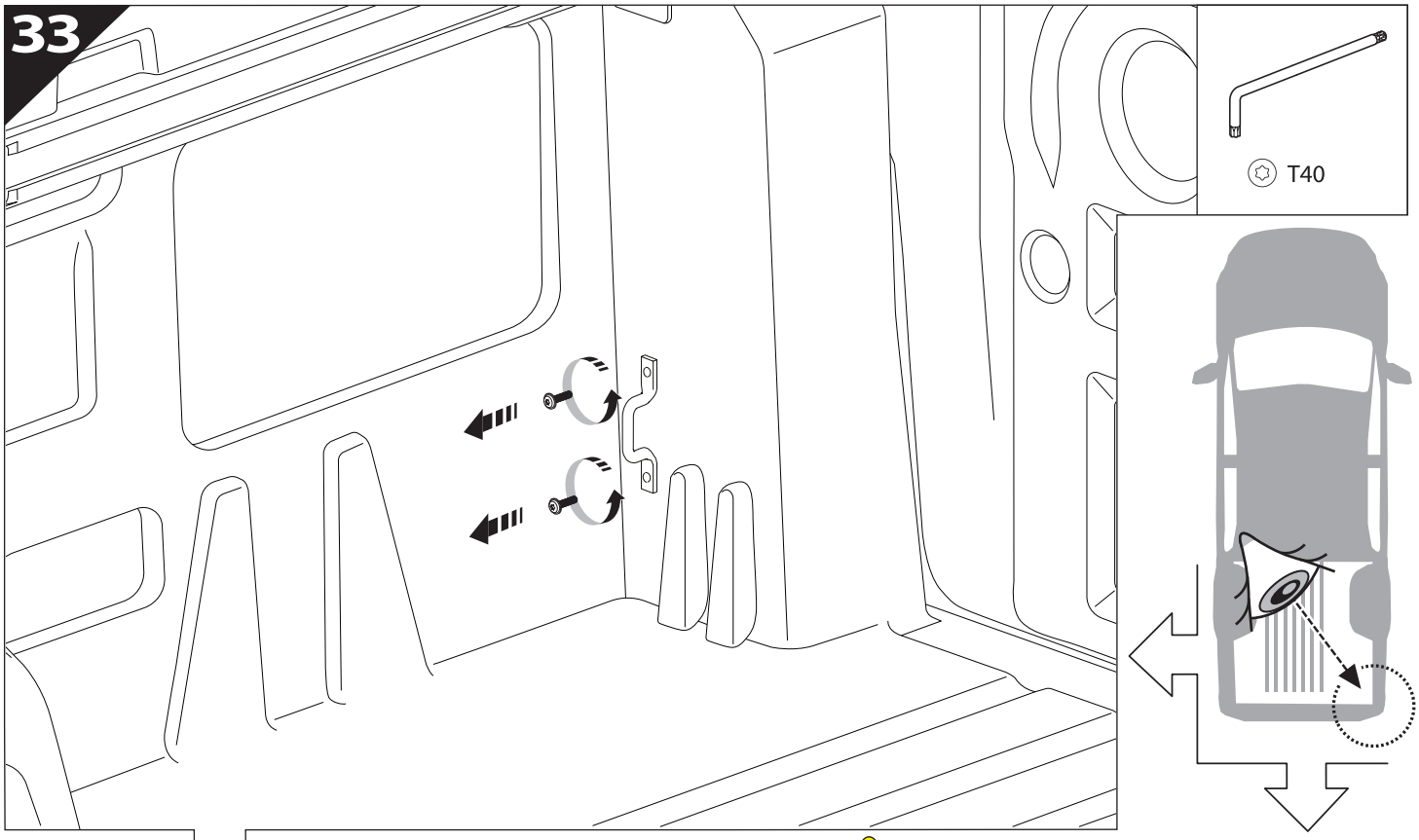
33
T40

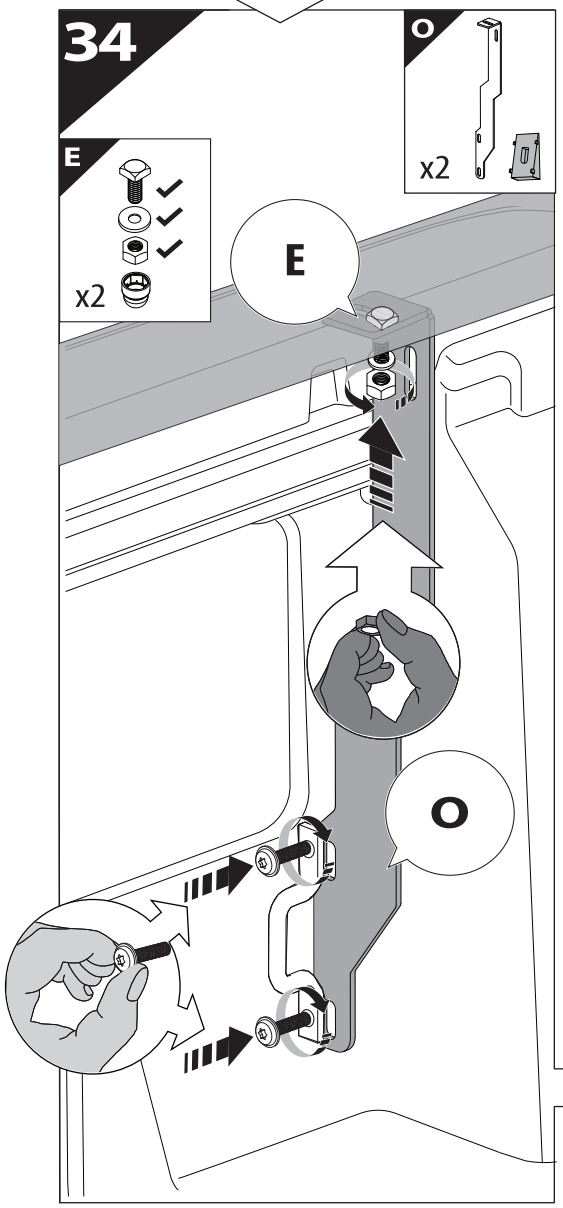
34
E
x2
O
x2
E
O

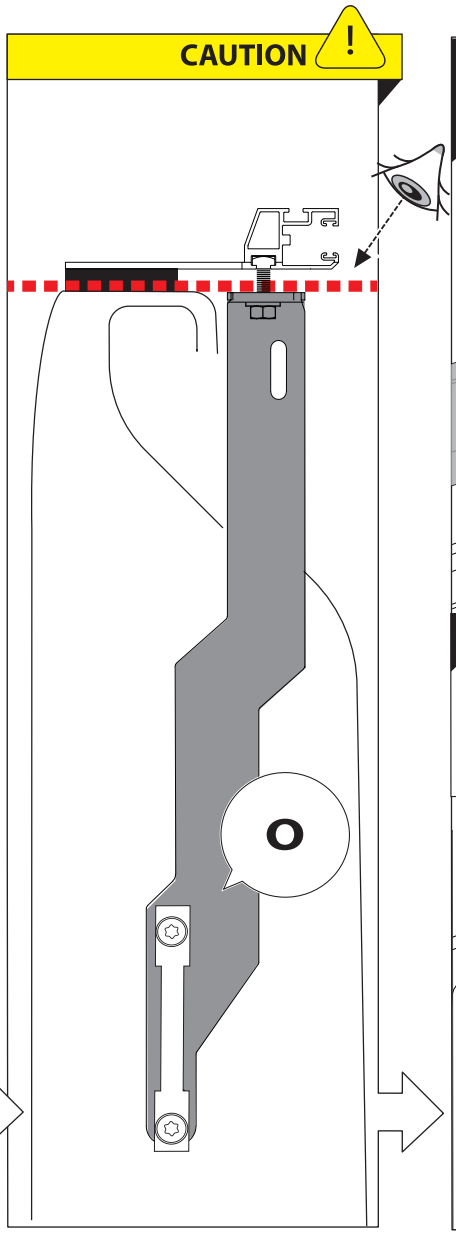
CAUTION
!
O

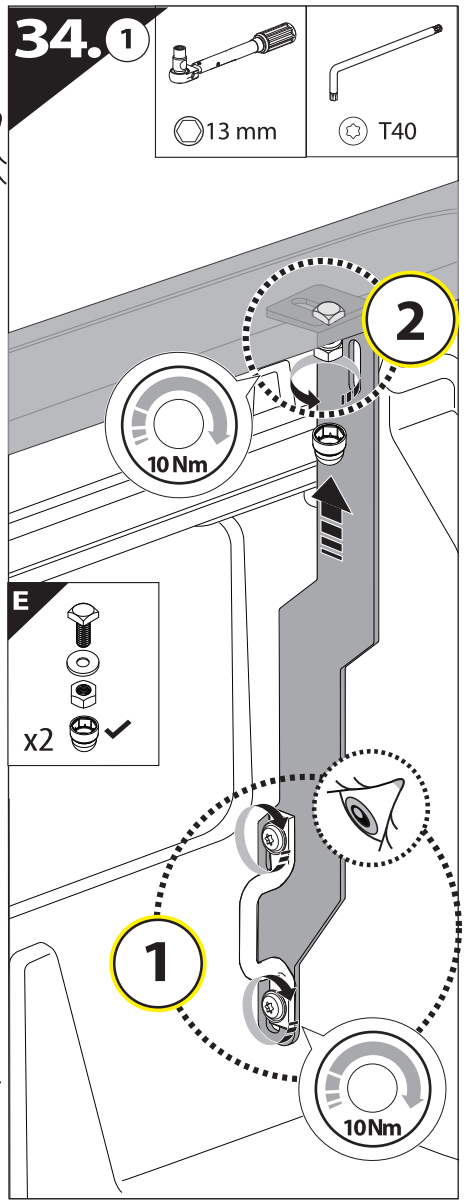
34.1
13 mm
T40
2
10 Nm
E
x2
1
10Nm

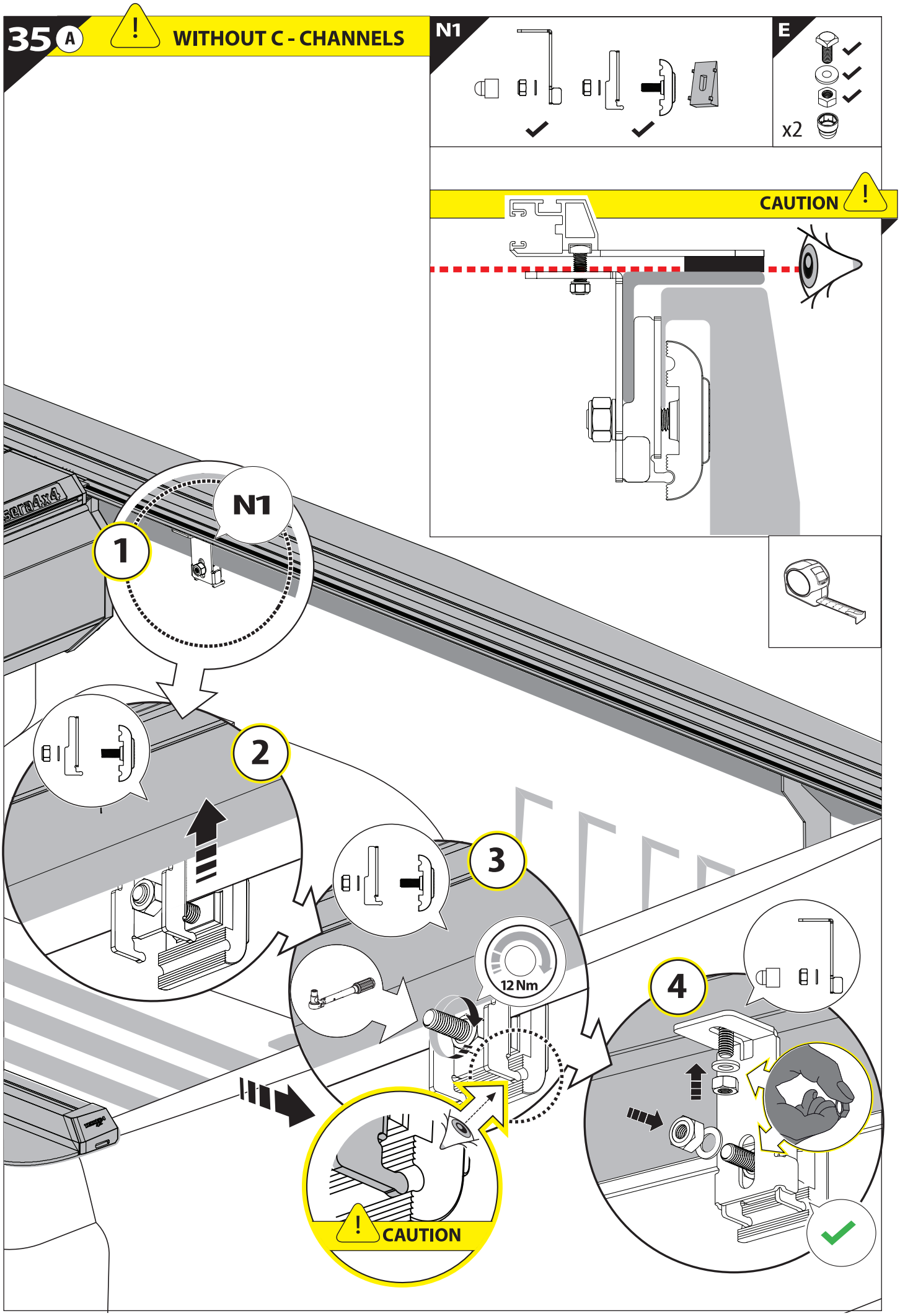
35 A
WITHOUT C - CHANNELS
N1
E
x2
CAUTION
N1
1
2
3
12 Nm
4
CAUTION

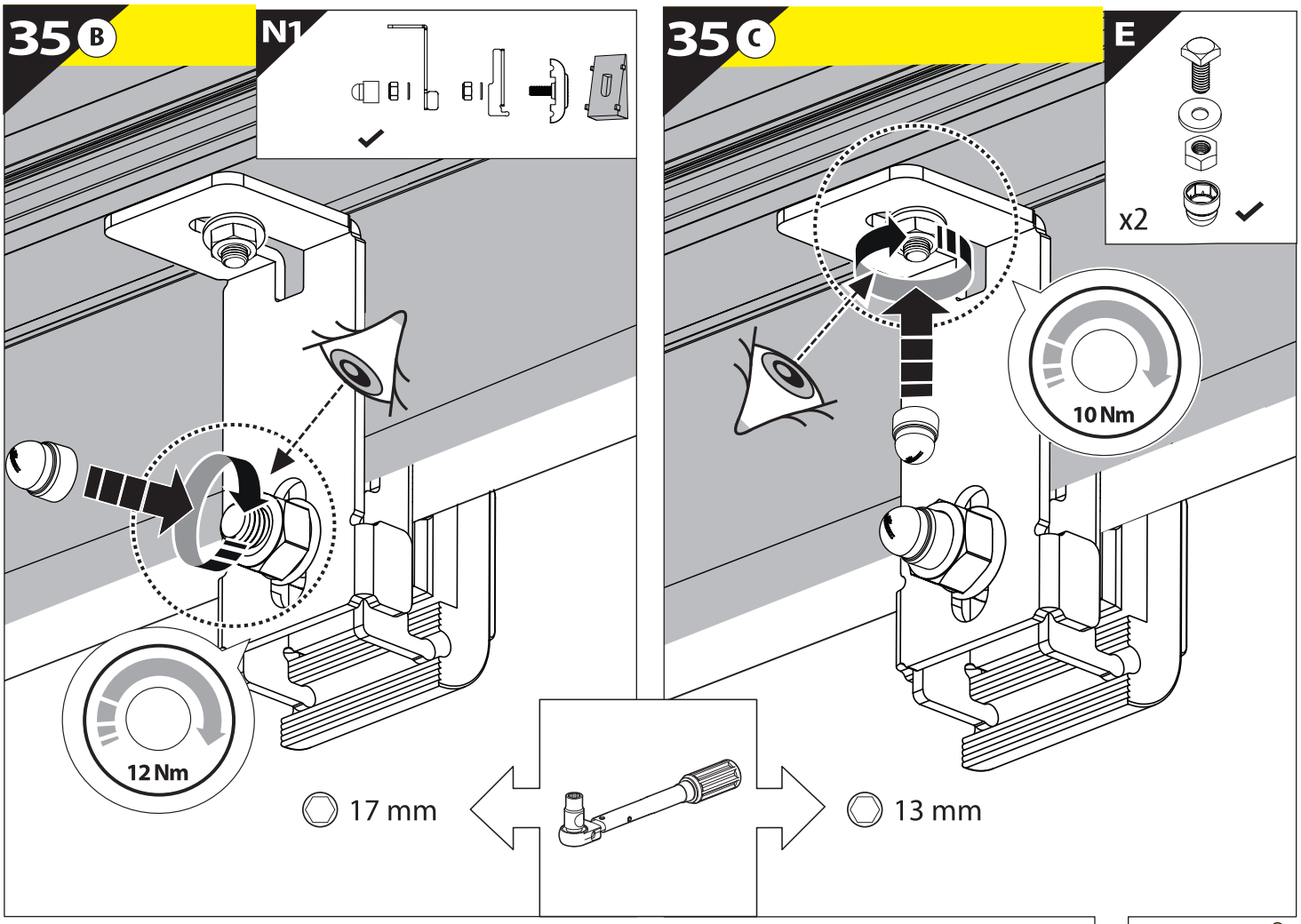
35 B
N1
12 Nm
17 mm
35 C
E
x2
10 Nm
13 mm

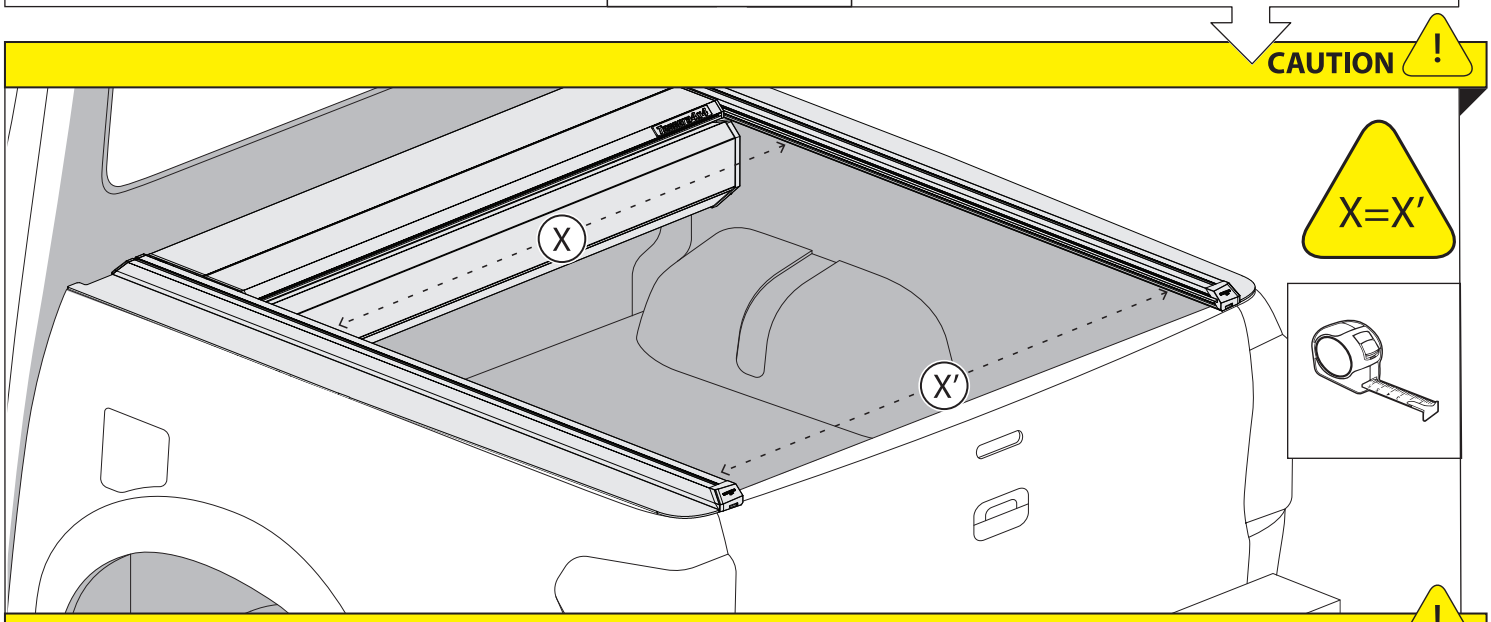
CAUTION
X
X'
X=X'

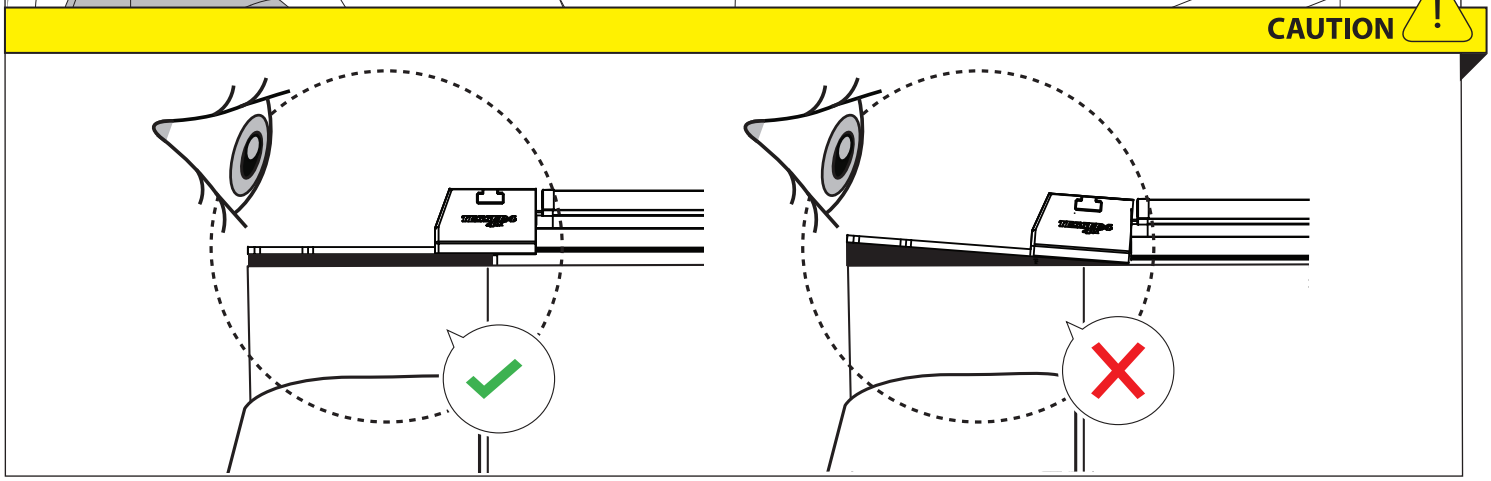
CAUTION

35 A WITH C - CHANNELS

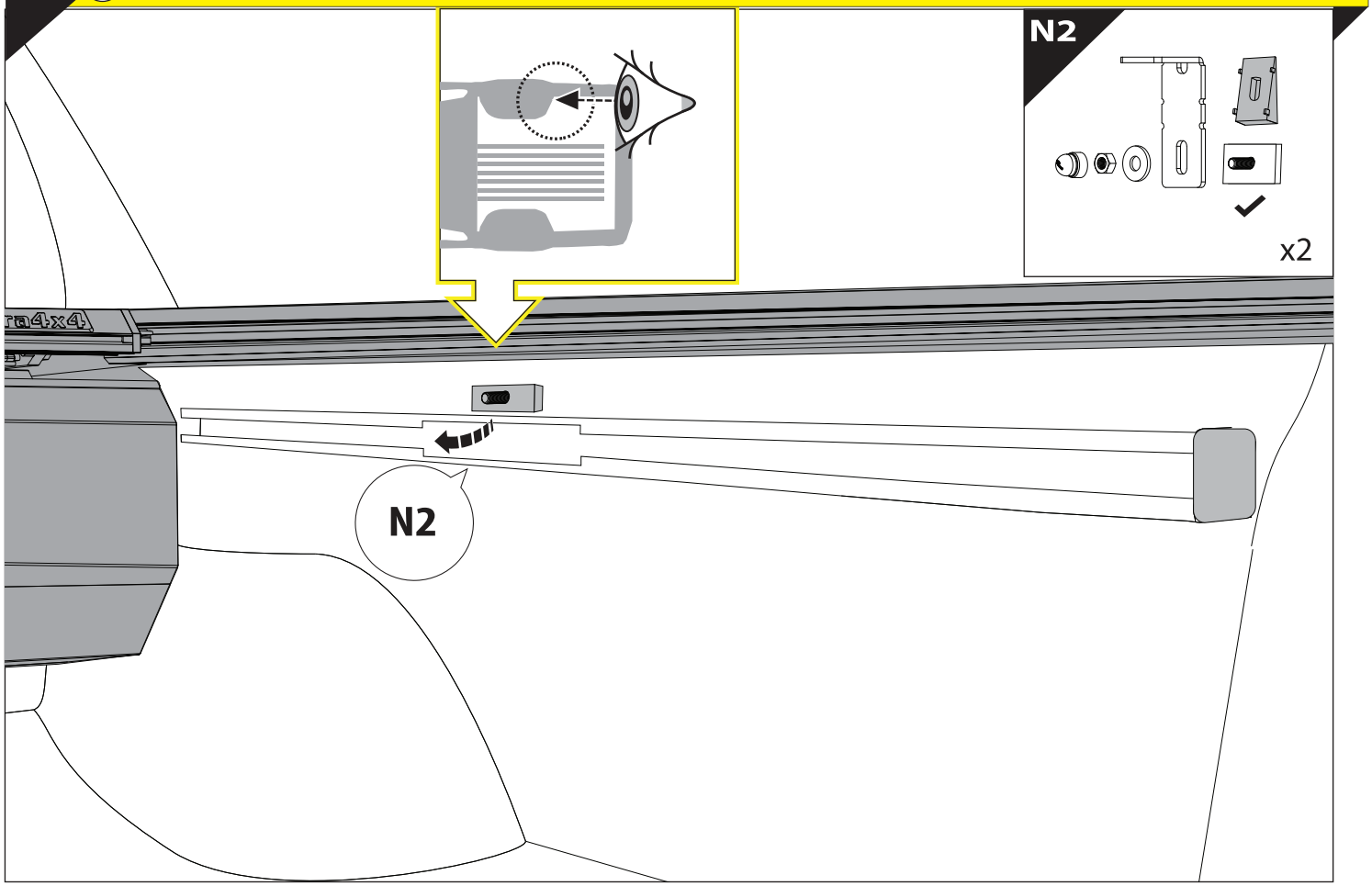

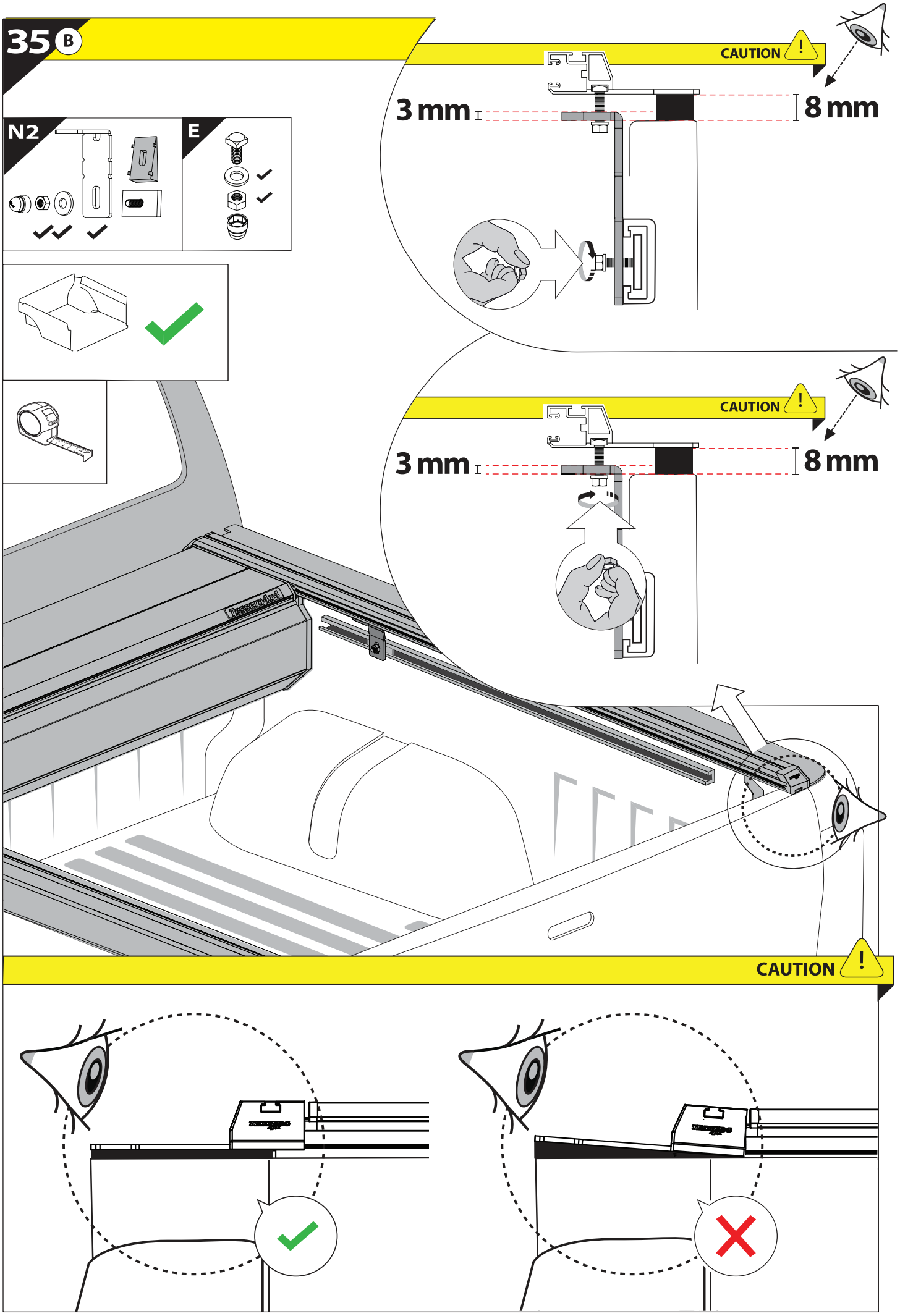
35 B
N2
E
CAUTION
3 mm
8 mm
CAUTION
3 mm
8 mm
CAUTION

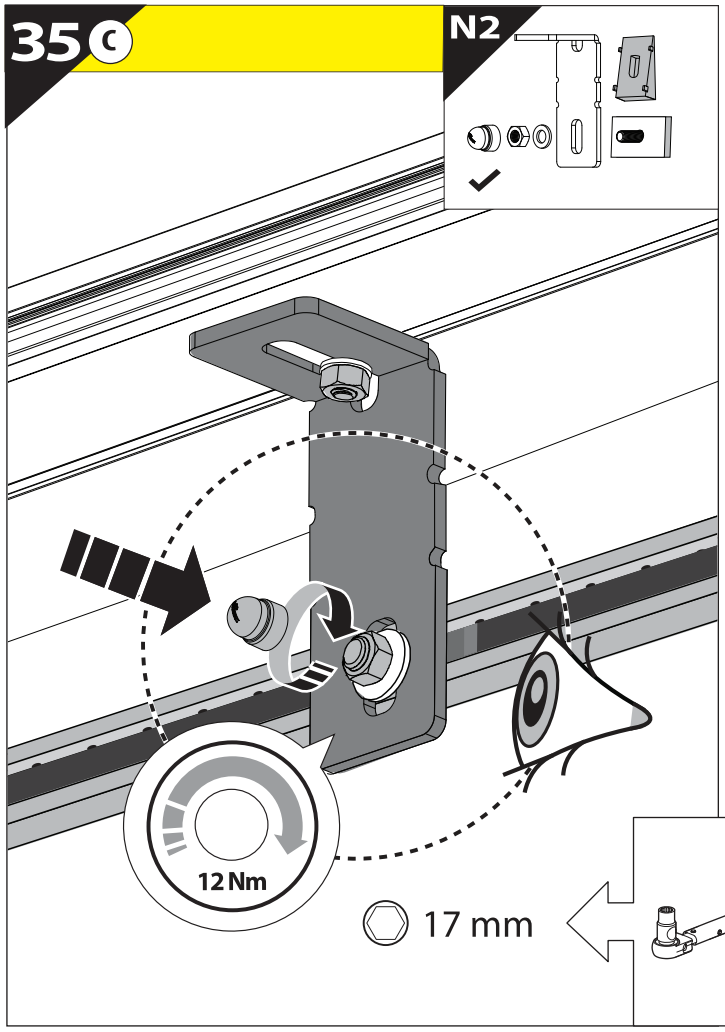
35 C
N2
12 Nm
17 mm

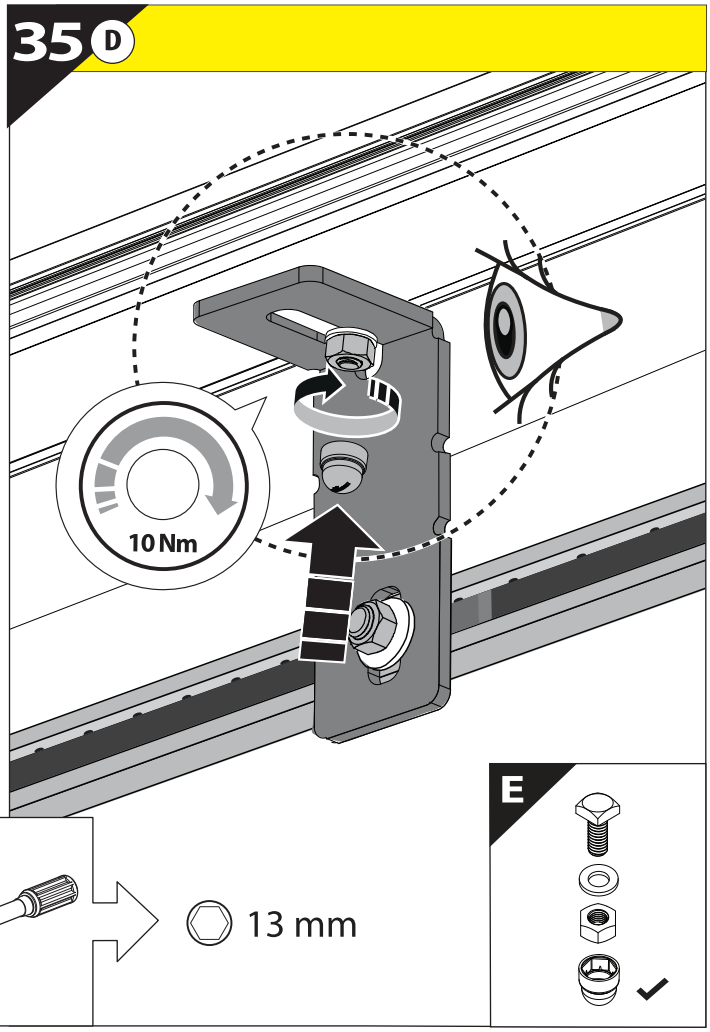
35 D
10 Nm
E
13 mm

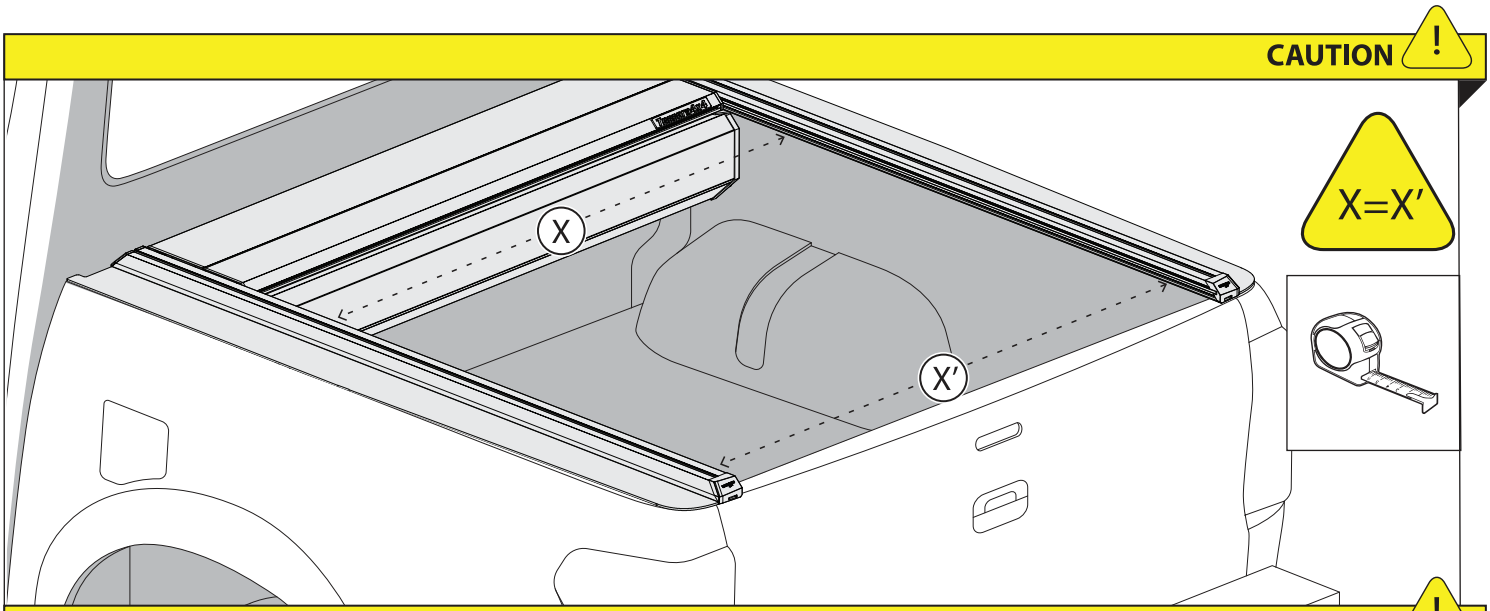
CAUTION
X
X'
X=X'

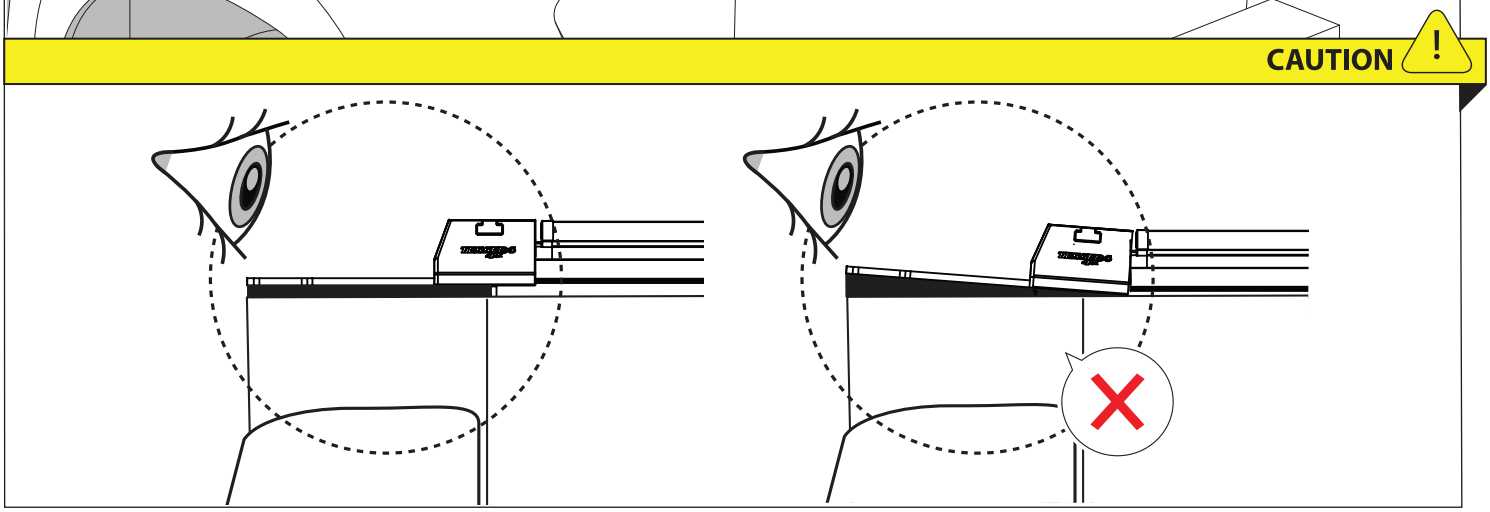
CAUTION

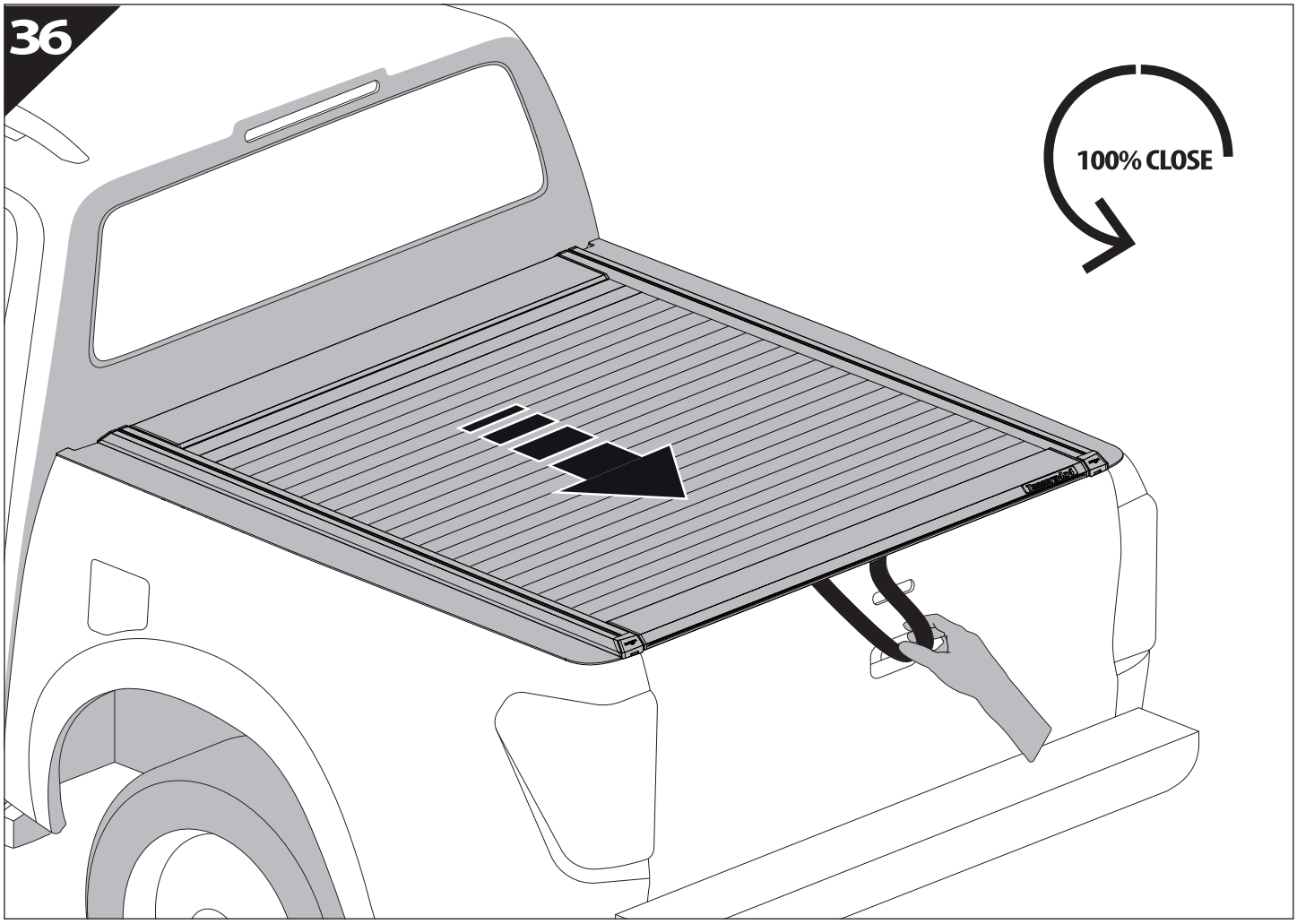
36
100% CLOSE

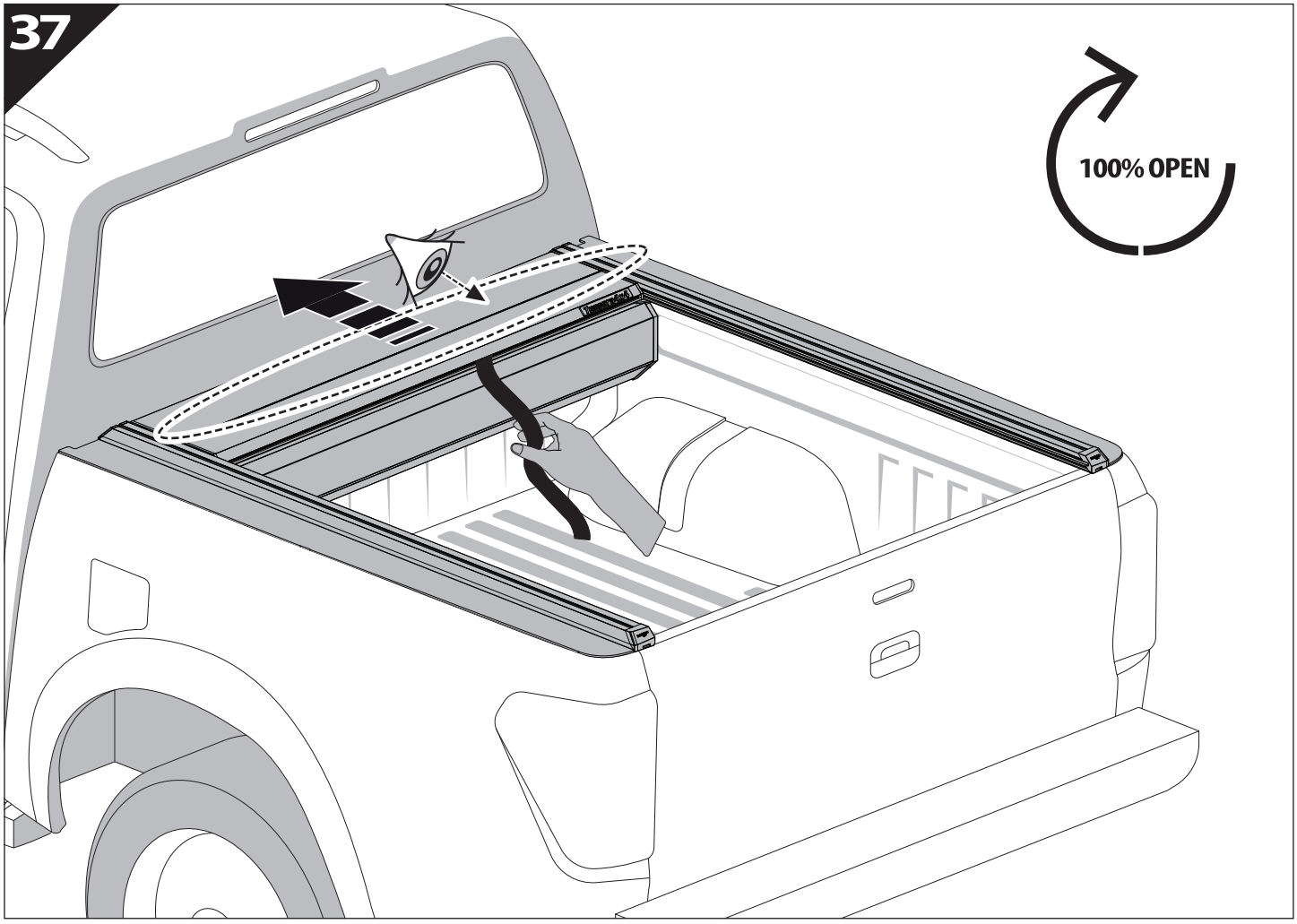
37
100% OPEN

TESSERA 4x4
OFF ROAD ACCESSORIES
Think Quality!

GR:	Οδηγίες Εγκατάστασης	H:	Szerelési utasítás
GB:	Installation manual	P:	Instruções de instalação
SF:	Asennusohje	RUS:	Инструкция по установке
F:	Notice de montage	N:	Monteringsveiledning
PL:	Instrukcja montażu	D:	Einbauanleitung
NL:	Installatie-instructies	CZ:	Návod k instalaci
TR:	Montaj Talimatı	I:	Istruzioni de montaggio
S:	Monteringsanvisning	DK:	Monteringsvejledning
E:	Instrucciones de montaje	RO:	Instructiuni de instalare

Customer Service: +30 (210) 5541161, +30 (210) 5541154 (08:00 - 16:00 EET)

Support department: info@gianso.gr

Website: www.tessera4x4.com

Address: 19.5 km of National road Athens-Korinthos (Elefsina) Greece, P.C: 19200